Capability Replacement Laboratory

Hanford Site
Building 325
DNFSB Recommendation 2004-2
Ventilation System Evaluation
CRL-ASSESS-ESH-001, Revision 0

Pacific Northwest National Laboratory
Operated by Battelle for the U.S. Department of Energy

Office of Science
U.S. DEPARTMENT OF ENERGY

NNSA
National Nuclear Security Administration

Defense Nuclear Facility Safety Board
Recommendation 2004-2
Ventilation System Evaluation
325 Building
Pacific Northwest National Laboratory
CRL-ASSESS-ESH-001 Revision 0

Submitted by:

G. A. Coles, Project Safety Basis Analysis	05/11/07 Date

Reviewed by:

A. R. Stithem, 325 Building Safety Basis Engineer	5/11/07 Date
D. G. Wandler, 325 Building Engineer	5/11/07 Date
F. G. Buck, 325 Building Manager	5·11·07 Date
R. D. Crisp, Deputy Project Quality Officer	5/11/07 Date
H. R. Vogel, ES&H Manager	5/11/07 Date
H. F. Kerschner, 300 Area Project Manager	5/11/07 Date
D. E. Knutson, Deputy Project Director	5/11/07 Date

Approved by:

J. K. McClusky, Project Director	5/11/07 Date

Executive Summary

In response to a request from the Pacific Northwest Site Office, the Capability Replacement Laboratory project performed a ventilation evaluation for Building 325 in accordance with the DOE Implementation Plan for the Defense Nuclear Facilities Safety Board Recommendation 2004-2 per guidance in Deliverables 8.5.4 and 8.7, *Ventilation System Evaluation Guidance for Safety-Related and Non-Safety-Related Systems.*

325 Building is a Hazard Category 2 facility. The Radioactive Exhaust Ventilation System (REVS) is a part of the ventilation system that has been cited in the current Documented Safety Analysis (DSA) as providing defense-in-depth (DID) for certain accidents. In accordance with the DOE 2004-2 evaluation guidance (*Deliverables 8.5.4 and 8.7 of Implementation Plan for Defense Nuclear Facilities Safety Board Recommendation 2004-2*), the ventilation system in general and the REVS in particular were evaluated using applicable DID and Safety Significant criteria defined in Table 5-1 of the evaluation guidance.

No part of the ventilation system is credited, currently or as part of the proposed facility upgrade, for reducing the consequences to onsite or offsite receptors (mitigation) due to a postulated accident identified in the DSA. A functional classification of DID was re-determined based on the predicted radiological consequences to receptors from postulated events as evaluated in DSA and supporting analyses for the facility per the evaluation guide.

This assessment did not identify any gaps involving a discrepancy between the safety basis requirements and the facility design. Accordingly, no cost/benefit evaluation was performed for modifications as none would be necessary to address gaps. Based on this evaluation, the assessment team recommended no further action.

Contents

Executive Summary i

Acronyms iii

1.0 Introduction 1
- 1.1 Facility Overview 1
- 1.2 Confinement Ventilation System Strategy 1
  - 1.2.1 Exhaust System for Radiological Control Areas 2
  - 1.2.2 Ventilation System Interlocks 4
- 1.3 Planned Ventilation Modifications 4

2.0 Functional Classification Assessment 5
- 2.1 Existing Classification 5
- 2.2 Evaluation 5
- 2.3 Summary 6

3.0 Evaluation 7

4.0 Conclusions 8

5.0 References 9

Appendix A – Data Collection Information 11

Appendix B – Compliance Against DID and SS Performance Criteria 13

Appendix C – Facility Evaluation Team 26

Figures

1. General 325 Building Ventilation System Schematic 3

Acronyms

CRL	Capability Replacement Laboratory
DID	defense in depth
DNFSB	Defense Nuclear Facility Safety Board
DOE	U.S. Department of Energy
Dp	differential pressure
DSA	Documented Safety Analysis
EU	extremely unlikely
FET	facility evaluation team
HEPA	high efficiency particulate air
HLRF	High-Level Radiochemistry Facility
MEI	maximum exposed individual
NPH	Natural Phenomena Hazard
PNNL	Pacific Northwest National Laboratory
RCA	Radiological Control Areas
REVS	Radioactive Exhaust Ventilation
RPL	Radiochemical Processing Laboratory
SAL	Shielded Analytical Laboratory
SC	Safety Class
SS	Safety Significant
TEDE	total effective dose equivalent

1.0 Introduction

In response to a request from the Pacific Northwest Site Office (PNSO) (letter dated March 21, 2007, "Contract No. DE-AC05-76RL01830 – 325 Building Defense Nuclear Facilities Safety Board Recommendation 2004-2"), the Capability Replacement Laboratory (CRL) project performed a ventilation evaluation for the 325 Building in accordance with the U. S. Department of Energy (DOE) Implementation Plan for the Defense Nuclear Facilities Safety Board Recommendation 2004-2 per guidance in Deliverables 8.5.4 and 8.7, *Ventilation System Evaluation Guidance for Safety-Related and Non-Safety-Related Systems*.

1.1 Facility Overview

The 325 Building is located in the 300 Area of the Hanford Site. The Columbia River is to the east, north Richland and the main site of the Pacific Northwest National Laboratory (PNNL) to the south, and Hanford Site to the west and north. The 325 Building was designed to support general radiochemical research, development, demonstration and analytical services. It consists of a central section containing general purpose laboratories for low-level radiochemical work; a south (front) wing containing office space and maintenance shops; the High-Level Radiochemistry Facility (HLRF) in the east wing, and the Shielded Analytical Laboratory (SAL) in the west wing, which provides shielded enclosures (hot cells) with remote manipulators for high-level radiochemical work.

Laboratory operations and activities in the 325 Building involve research and development in radiochemical process science and engineering; evaluation, analysis and testing of radioactive, radiochemical, chemical and physical material properties; development and experimentation in the design and application of radiation generating devices; and the development and conduct of analytical procedures in support of research activities. Because the 325 Building is a research and development facility, work conducted in the facility frequently changes consistent with programmatic objectives.

The hazard categorization for the 325 Building was performed in accordance with DOE-STD-1027-92, *Hazard Categorization and Accident Analysis Techniques for Compliance with DOE Order 5480.23, Nuclear Safety Analysis Reports*, Change Notice 1, September 1997, and meets the requirements of Section 830.202(b) of 10 CFR 830.

The 325 Building radiological inventory, by radionuclide, was compared to the categorization threshold quantities identified in DOE-STD-1027-92, and based on specific radioactive material inventories present in the 325 Building, it was determined that the 325 Building was a Hazard Category 2 Nonreactor Nuclear Facility. Based on the hazard category screening, the anticipated work at 325 Building, and the radioactive material quantities analyzed in this 325 Building Documented Safety Analysis (DSA), the 325 Building is designated as a Hazard Category 2 Nonreactor Nuclear Facility.

1.2 Confinement Ventilation System Strategy

This section briefly describes the ventilation system. It distinguishes the Radioactive Exhaust Ventilation System (REVS) from the overall system. The facility does not credit any active confinement ventilation to perform a Safety Class (SC) or Safety Significant (SS) function.

The 325 Building ventilation systems are designed to provide environmental controls within the facility including confinement of radioactive materials, removal of chemical fumes, temperature control, humidity control, and occupant comfort. A schematic of the ventilation is provided in Figure 1.

The main supply and exhaust ventilation systems are designed as a single pass system (i.e., no recirculation). Cascading pressure levels are used to maintain proper airflow balance and direction. The system is designed to supply air to clean areas or areas of limited hazards (e.g., corridors) and exhaust air in the direction of progressively more hazardous/contaminated areas. This design establishes the laboratories at a negative pressure with respect to the corridors, and hoods, glove boxes and hot cells at a negative pressure with respect to the laboratories. The supply and exhaust systems operate to maintain the first floor and basement of the building negative to atmospheric pressure. The exhaust air from radiological controlled areas (RCAs), after passing through primary High-Efficiency Particulate Air (HEPA) filters, is collected in the exhaust fan inlet plenum, passes through the final HEPA banks and fans and is discharged to the exhaust stack.

Supply air to the majority of the building is provided by four main air supply fans that are located in the East Equipment Room on the second floor. Other smaller air supply fans provide supply air to specific areas of the building that require special temperature or humidity control. The main air supply intake plenums provide 100% outside air from air intakes on the northeast side of the building. Each plenum contains equipment for temperature and humidity adjustment and control.

During normal operation, three of the four fan units operate with the fourth on standby. The four air supply fans discharge into a common supply air plenum. The supply air is ducted from the supply plenum to various portions of the building. The supply air is provided to less hazardous areas such as building corridors and hot cell galleries, and exhausted by the building exhaust system through laboratory exhaust, fume hoods, glove boxes and hot cells.

Two other air supply fans serve areas in the west wing of the building. One unit supplies 100 percent outside air to Room 202 that is subsequently exhausted by the main building exhaust system. The other unit supplies air to Room 209 (located on the first floor) and Rooms 23, 23A, and 23B (located in the basement).

1.2.1 Exhaust System for Radiological Control Areas

The ventilation exhaust system for RCAs consists of the exhaust fans, filters, ductwork, plenums and the building stack that provides the motive force, filtration and flow path from the RCAs. The exhaust air from radiological controlled spaces passes through primary HEPA filters and is collected in the exhaust plenum on the west side of the basement. From the plenum, the air travels through the underground exhaust tunnel to the final HEPA filter inlet plenum below the final HEPA filter banks. After passing through the final HEPA filters, the exhaust is collected in the exhaust fan inlet plenum, passes through the fans and is discharged to the exhaust stack. The final HEPA filters, fans and associated ductwork are located in the Filter Building. Normal operation of the main building exhaust system is three of four exhaust fans operating, with the fourth fan on standby.

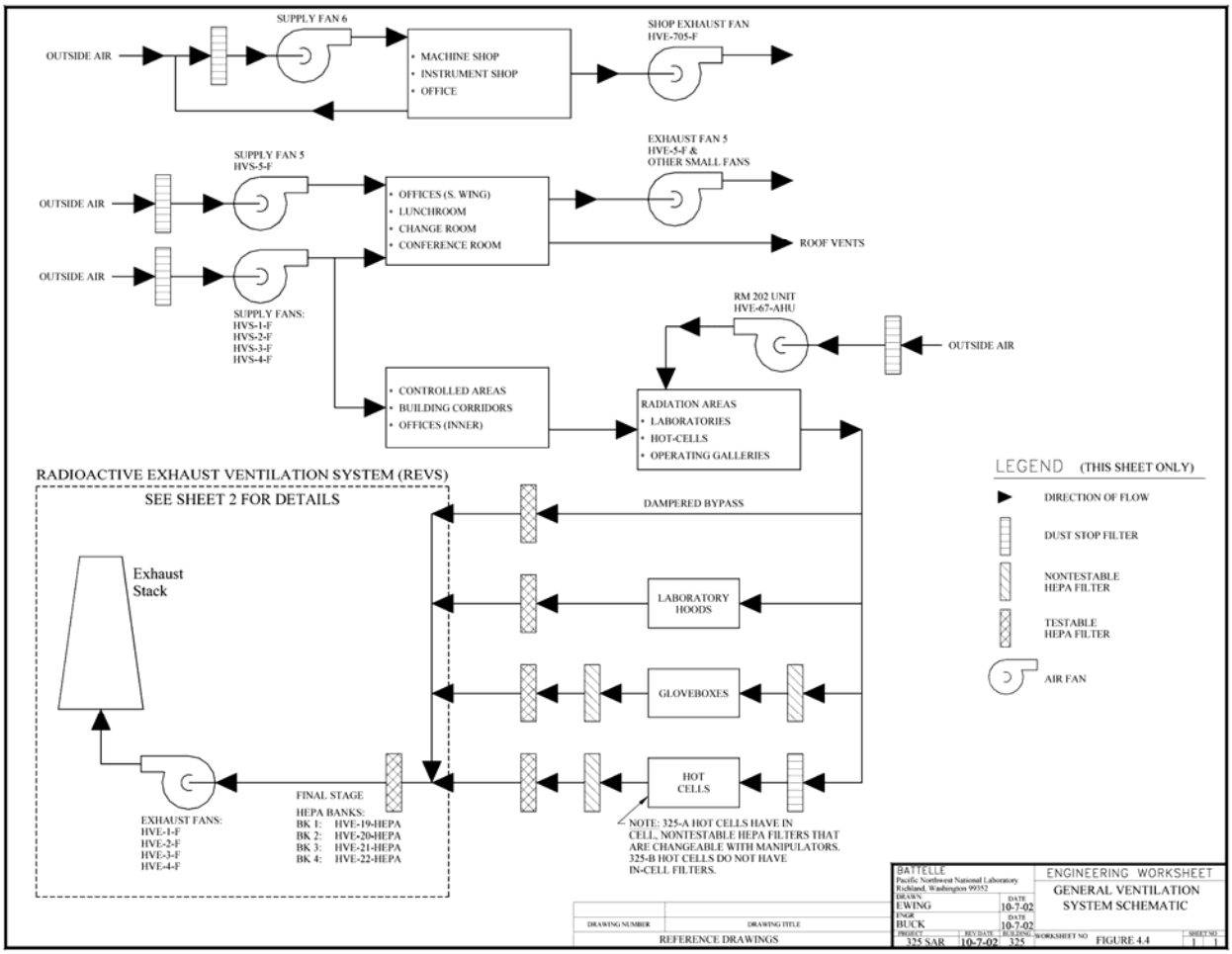

Figure 1. General 325 Building Ventilation System Schematic

The stack exhaust is monitored and sampled for radioactive material emissions as appropriate for the work being performed in the facility and as required by state permits. The monitoring and sampling of the building exhaust is a non-safety function. The exhaust system HEPA filters are periodically tested and are changed out when the airflow through the filter becomes restricted to the point that flow and differential pressure specifications are not met or the particulate removal efficiency of the filter is below the minimum value of 99.95% as determined by testing. The existing filters were installed in 2004 with an expected design life of 10 years (per the DOE Handbook) listed in MAXIMO (the RPL Master Equipment List). Component life cycle management is addressed in and managed to the following: ADM-360 Risk Based Life Cycle Asset Management, ADM-08 Predictive/Preventative Maintenance Program,ADM-CM-26 System Performance Monitory.

A portion of the main exhaust ventilation system is classified as SS because it provides significant DID for certain postulated accident conditions. This portion of the system is designated as the REVS. The REVS consists of the exhaust plenum from the basement to the HEPA filters, the final stage HEPA filters and housings in the filter building, exhaust fans, dampers, the stack and ductwork connecting these components. The REVS is described in detail in Chapter 8 of the DSA. The REVS is not relied on to mitigate radioactive material releases in Chapter 7 of the DSA accident analysis; however, REVS provides, DID protection to on-site workers and the public in the event of an accidental release of radioactive materials. Therefore, the REVS is classified as SS because of its DID safety function. The

remainder of the exhaust ducting in the building is not necessary to accomplish the DID safety function of filtering radioactive material releases from postulated accidents.

The exhaust (including REVS) ventilation system ductwork is constructed of formed 16 to 18 gauge stainless steel. This ductwork has a limiting design pressure of 10 inches water gauge (0.002 MPag) based on design standards for this type of duct published by the Sheet Metal and Air Conditioning Contractors National Association. The thin-walled stainless steel duct can be assumed to be the weakest portion of the ventilation system as the plenum and tunnel are constructed of heavier gage material with stiffeners, welded joints and reinforcing on the outside of the commercial steel.

Duct failure within the facility could lead to spread of contamination and potential exposures to workers but would not lead to direct release of radioactive material from the building. Therefore, if any material were to be released due to failure of the ductwork, it would remain in the building or pass through the final stage of HEPA filtration via the basement plenum. This filtration capability provides DID in the event of an accidental release of radioactive materials.

1.2.2 Ventilation System Interlocks

The four main supply fans and the four main REVS exhaust fans are interlocked to operate as fan pairs. A fan pair consists of one supply fan and one exhaust fan. Typical operation is with three fan pairs operating and one pair as backup. The interlocks are configured such that a supply fan can operate only if the corresponding exhaust fan is running. The loss of an operating exhaust fan will automatically shut down the corresponding supply fan and initiate startup of the backup exhaust fan.

1.3 Planned Ventilation Modifications

There are no CRL project plans to modify REVS or other parts of the ventilation system except for maintenance upgrades to some controllers. Also, as preparation for the extended mission a scoping hazards analysis was performed and is documented in CRL-TECH-ESH-004, *Scoping Hazards Analysis and Control Allocation for the 325 Building Extended Mission*. The purpose of the scoping hazard analysis was to provide early information to the project about the continued adequacy of current nuclear safety controls. Based on the results of the scoping hazards analysis, current controls schemes were validated. The ventilation system does not play a significant role in the current safety basis strategy and it is not ancticipated to play a significant role in the safety basis strategy for the extended mission.Neither, REVS or the general ventilation system is anticipated to be credited as SS in the 325 Building extended mission DSA. Designation of an SS ventilation system would not provide any meaningful reduction in does consequences to the onsite worker or public due to credible radioactive release accidents at the 325 Building.

2.0 Functional Classification Assessment

2.1 Existing Classification

A portion of the main exhaust ventilation system is cited as providing significant DID for certain postulated accident conditions. This portion of the system is designated as the REVS. The REVS consists of the exhaust plenum from the basement to the HEPA filters, the final stage HEPA filters and housings in the filter building, exhaust fans, dampers, the stack and ductwork connecting these components. The REVS is described in detail in Chapter 8 of the DSA. The REVS is not relied on to mitigate radioactive material releases in the Chapter 7 of the DSA accident analysis. REVS provides defense-in-depth protection to on-site workers and the public in the event of an accidental release of radioactive materials, and therefore, is identified as safety significant because of its defense-in-depth safety function in Chapter 8 of the DSA. There are no Limiting Conditions of Operation associated with REVS. Under the Radiation Protection Program, Section 5.3.2.e of the Administrative Controls of the Technical Safety Requirements, 325 Building management shall maintain a radiation protection program that provides a filtered release pathway for contaminated and potentially contaminated spaces of the 325 Building through the final stage HEPA filters in the REVS. The remainder of the exhaust ducting in the building is not necessary to accomplish the defense-in-depth safety function of filtering radioactive material releases from postulated accidents.

The seismic Performance Criteria for the entire 325 Building is Performance Criteria 2 (PC-2). No part of the ventilation system is credited with providing a SS function therefore, PC-3 does not apply

2.2 Evaluation

There are no SS or SC functions identified in the current DSA associated with the 325 Building ventilation. No events were identified in the DSA accident analysis that challenge the 25 rem public evaluation guidelines from DOE-STD-3009-94, *Preparation Guide for U.S. Department of Energy Nonreactor Nuclear Facility Safety Analysis Reports*, or the 100 rem criteria for the onsite worker. The release event that results in the highest dose consequences is the extremely unlikely (EU) seismic event. The consequence to the onsite worker is 8.9 rem total effective dose equivalent (TEDE) and 1.6 rem TEDE to the public maximum exposed individual (MEI). These dose consequences are not mitigated by HEPA filtration. The dose from tritium is also reported in the DSA for the EU seismic event (46 rem TEDE to the onsite worker and 4.8 rem TEDE to MEI). The 2007 annual update to the 325 Building DSA and TSR includes a reduction in the TSR facility limit for tritium that will reduce the consequences associated with the EU seismic event to 16 rem TED for the onsite worker and 1.7 rem TEDE to the public MEI. This change to the 325 Building safety basis is planned to be implemented in 2007.

Appendix A presents the Data Collection information. This represents the relevant information extracted from the DSA accident analysis. The REVS is cited in the DSA accident analysis as DID for four accidents (an unlikely fire, an unlikely explosion, an unlikely spill and an anticipated seismic event). Neither, the general ventilation system nor REVS is required to operate in abnormal or accident conditions. REVS filtration is not credited with reducing the consequences of any releases addressed in the DSA accident analysis.

2.3 Summary

This re-evaluation using the data collection approach defined in Table 4-3, Data Collection Table, from the DOE letter to the Defense Nuclear Facility Safety Board, “Ventilation System Evaluation Guidance for Safety-Related and Non-Safety-Related Systems,” February 2006. The re-evaluation, presented in Appendix A, determined that the REVS portion of the ventilation system is required for DID. Further, it is anticipated that the future extended mission of the facility will not result in different classification.

3.0 Evaluation

In accordance with the DOE 2004-2 evaluation guidance, *Deliverables 8.5.4 and 8.7 of Implementation Plan for Defense Nuclear Facilities Safety Board Recommendation 2004-2*, the ventilation system in general and the REVS in particular were evaluated using applicable DID and SS performance criteria defined in Table 5-1 of the evaluation guidance. Although only a part of the ventilation system, REVS, is cited in the current DSA as providing DID for certain accidents, evaluation against SS performance criteria was also performed.

The ventilation system was walked down by a facility evaluation team (FET). Accessible areas where the ventilation system is physically located were visited. This includes the basement where much of the system is located. The basement has high ceiling and a lot of open space which facilitated viewing. In addition, the A and B annexes, and a representative set of laboratory rooms were examined. Documentation was reviewed to confirm system configuration and operational requirements. This included reviewing the System Design Description for the ventilation system as well as applicable procedures and drawings. Based on these walk downs and reviews an evaluation was performed and is presented in Appendix B, and the FET members are identified in Appendix C.

Evaluation against the DID performance criteria is presented first, then in the same table, evaluation against the SS performance criteria is presented. Basis documents that support evaluation judgments such as system descriptions, operating procedures, preventive maintenance procedures and safety basis documents are referenced in the discussion column.

Lessons learned guidance from the DNSFB letter to DOE, “Cautions for Ventilation Systems Evaluations and Lessons Learned from Pilot Evaluations,” March 6, 2007, were considered during the evaluation. Per guidance in the letter, Natural Phenomena Hazard (NPH) events were not considered because the safety basis does not credit the ventilation system as being operational during or after an NPH event. Also per guidance from that letter no attempt was made to demonstrate code compliance or code reconstitution.

The evaluation did not identify any gaps involving a discrepancy between the safety basis requirements and the facility design. This is primarily because the ventilation is not credited with SS or SC safety functions in the DSA accident analysis.

4.0 Conclusions

This evaluation, using the Table 4-3 Data Collection approach, determined the REVS portion of the ventilation system to be DID.

This assessment did not identify any gaps involving a discrepancy between the safety basis requirements and the facility design. Accordingly, no cost/benefit evaluation was performed for modifications, as none would be necessary to address gaps. Based on this evaluation, the assessment team recommended no further action.

5.0 References

ARES Report No 06348011-002, Rev 0, *Seismic and Wind Evaluation of Building 325 at Pacific Northwest National Laboratory,* ARES Corporation, Richland Washington, March 2007.

CRL-TECH-ESH-004, Rev 0, *Scoping Hazards Analysis and Control Allocation for the 325 Building Extended Mission,* Pacific Northwest National Laboratory, Richland, Washington, 2007.

DOE-HDBK-1169-2003, *Nuclear Air Cleaning Handbook,* U.S. Department of Energy, Washington D.C., 2003.

DOE-STD-1092-92, Hazard Categorization and Accident Analysis Techniques for Compliance with DOE Order 5480.23, Nuclear Safety Analysis Reports, U.S. Department of Energy, Washington D.C., 2006.

DOE-STD-3009-94 CN3**.** *Preparation Guide for U.S. Department of Energy Nonreactor Nuclear Facility Safety Analysis Reports,* U.S. Department of Energy, Washington D.C., 2006.

DOE letter to the DNSFB, "Ventilation System Evaluation Guidance for Safety-Related and Non-Safety-Related Systems, which are deliverables for Commitments 8.5.4 and 8.7 of the 2004-2 implementation plan," February 2006.

PNNL-55440, *Final Stage HEPA Filters Set #5,* Pacific Northwest National Laboratory, Richland Washington, 2004.

PNNL-BEP-RPL, Rev 2007, *RPL Building Emergency Procedure,* Pacific Northwest National Laboratory, Richland Washington, 2004.

PNNL-DSA-RPL, Rev 0, Radiochemical Processing Laboratory *Documented Safety Analysis,* Pacific Northwest National Laboratory, Richland Washington, 2006.

GP-487, *General Expectation and Operational Guide for PNNL Grounds Maintenance,* Pacific Northwest National Laboratory, Richland Washington, 2005.

PNNL-SOP-325-ELEC, *Loss of Power,* Pacific Northwest National Laboratory, Richland Washington, 2004.

PNNL-SOP-325-HVAC-0, *REVS Operability Requirements,* Pacific Northwest National Laboratory, Richland Washington, 2004.

PNNL-RPL-SDD-REVS, Rev 2, *System Design Description, Radioactive Exhaust Ventilation System,* Pacific Northwest National Laboratory, Richland Washington, 2004.

Appendix A – Data Collection Information

Ventilation System Evaluation Guidance - Data Collection Table													
Confinement Documented Safety Analysis Information													
325 Building - Hazard Category 2													
Bounding Accidents That Cite Ventilation	**Type Confinement Active/ Passive**	**Doses/Frequency (1)**							**Safety Class-ifcation**	**Function**	**Functional Requirement**	**Performance Criteria**	**Compen-satory Measures**
		Unmitigated			**DSA Credited Controls**	**Mitigated**							
		Freq	**Offsite rem**	**Onsite rem**		**Freq**	**Offsite rem**	**Onsite rem**					
7.2.1 Room Fire	Active	A	0.66	3.4	Rad material limits Fire Suppression Fire Protection Program	U (2)	0.66	3.4	DID	Reduce release of radionuclides - mitigate doses	Zone control, filtered exhaust, backup fans, backup power,	Exhaust via HEPA filters at 99.95%, 10" water pressure design on duct.	Not required
7.3.1 Explosion	Active	U	0.2	1.6	Rad material limits	U (3)	0.2	1.6	DID	Reduce release of radionuclides - mitigate doses Reduce frequency of explosion by removing flammable vapors	Zone control, filtered exhaust, backup fans, backup power, remove chemical fumes	Exhaust via HEPA filters at 99.95%, 10" water pressure design on duct. None specified for removal of flammable vapors.	Not required
7.4.1 Radioactive Material Spill	Active	U	0.15	1.5	Rad material limits	U (3)	0.15	1.5	DID	Reduce release of radionuclides - mitigate doses	Zone control, filtered exhaust, backup fans, backup power,	Exhaust via HEPA filters at 99.95%, 10" water pressure design on duct.	Not required
7.6.2 Anticipated Seismic Event	Active	A	0.23	1.2	Rad material limits	A (3)	0.23	1.2	DID	Reduce release of radionuclides - mitigate doses	Zone control, filtered exhaust, backup fans, backup power,	Exhaust via HEPA filters at 99.95%, 10" water pressure design on duct. Not seismically qualified to U or Eu level seismic events.	Not required

Notes:
(1) No credit is taken for mitigation of dose consequences, by REVS or any other system, for any of the accidents cited. Fire Protection/Suppression is credited for reducing the frequency of fire events. Based on the calculated doses further mitigation is not required.
(2) Calculated doses are based on the maximum allowed inventory limited..
(3) Doses given are the larger of the particulate or gaseous (tritium)

Appendix B – Compliance Against DID and SS Performance Criteria

EVALUATION CRITERIA	DISCUSSSION	REFERENCE
	DID Performance Criteria Ventilation system – General Criteria	
Pressure differential should be maintained between zones and atmosphere.	There are two exhaust ventilation systems operating within the 325 Building: the main building exhaust ventilation system, which serves the "hot" areas (contaminated and potentially contaminated spaces), and the "cold" serving the offices and administrative spaces and the Radioactive Exhaust Ventilation System (REVS). The REVS is a subsystem of the main building exhaust ventilation system, and has been classified as Defense in Depth (DID) for its added layer of protection during normal and upset conditions at the facility. The building ventilation system is a once-through system designed to supply air to clean areas and exhaust air in the direction of progressively more hazardous areas. The 325 Building ventilation exhaust system provides cascading pressure levels to maintain proper airflow, air balance and direction of air flow. The design establishes the first floor and basement building pressure to be negative with respect to ambient, (outside) air pressure, the laboratories at a negative pressure with respect to the corridors, and the hoods, glove boxes and hot cells at a negative pressure with respect to the laboratories. During normal operations, building static pressure and exhaust static pressure are monitored to ensure that the airflow and balance and being maintained. Pressure control for the 325 Building is provided by the main ventilation system in a "supply side" control format; that is the supply side of the main ventilation system controls how negative the building pressure is allowed to become with respect to ambient by controlling the amount of air supplied to the building. The exhaust side capacity significantly exceeds the supply side capacity, and if allowed to operate without any control interface, building pressure is negative. The control system limits the amount of air supplied to the building, thus building pressure becomes more negative relative to ambient. Further, design interlock features of REVS prevent operation of a supply fan without operation of the exhaust fan, and REVS instrumentation provides system status in normal and faulted conditions. Specific pressure differential instrumentation installed between zones is identified in Figure 8.1 of the REVS SDD. References: PNNL-RPL-SDD-REVS, Rev 2, *System Design Description, Radioactive Exhaust Ventilation System.* PNNL-DSA-RPL, Rev 0, *Radiochemical Processing Laboratory Documented Safety Analysis* GAP Analysis: None	DOE-HDBK-1169 (2.2.9) ASHRAE Design Guide

EVALUATION CRITERIA	DISCUSSSION	REFERENCE
Materials of construction should be appropriate for normal, abnormal, and accident conditions.	In the safety basis, neither the main building exhaust ventilation system nor the REVS is required to operate in abnormal or accident conditions. The REVS is not credited with reducing the consequences or frequency of any releases addressed in the Documented Safety Analysis (DSA) accident analysis and is cited in the DSA accident analysis as DID for four accidents (unlikely fire, unlikely explosion, unlikely spill and an anticipated seismic event). The REVS exhaust ventilation ductwork is 16 and 18 gauge stainless steel. The exhaust plenum duct is constructed of heavier gauge steel with stiffeners for reinforcement on the outside of the plenum. The exhaust tunnel is a concrete structure that is part of the filter building. The dampers, fan motors, HEPA filter enclosures and HEPA filters are commercial devices that have been painted, treated, or fabricated and are maintained for the type of service found in the 325 Building facility. All REVS components except for the stack and main plenum are located within the filter building and therefore not subject to outside weather conditions. The stack is made of carbon steel; the Main Exhaust fan housings are downstream of the final stage HEPA filters and are constructed of carbon steel. References: PNNL-RPL-SDD-REVS, Rev 2, *System Design Description, Radioactive Exhaust Ventilation System.* PNNL-DSA-RPL, Rev 0, *Radiochemical Processing Laboratory Documented Safety Analysis* Gap Analysis: None	DOE-HDBK-1169 (2.2.5) ASME AG-1
Exhaust system should withstand anticipated normal, abnormal and accident system conditions and maintain confinement integrity.	In the safety basis, neither the main building exhaust ventilation system nor the REVS is required to operate in abnormal or accident conditions. The REVS is not credited with reducing the consequences or frequency of any releases addressed in the DSA accident analysis and is cited in the DSA accident analysis as DID for four accidents (unlikely fire, unlikely explosion, unlikely spill and an anticipated seismic event). The room fire and the spill accidents are not expected to cause failure of the REVS, therefore the system could mitigate particulate releases by continuing to operate during these events. References: PNNL-RPL-SDD-REVS, Rev 2, *System Design Description, Radioactive Exhaust Ventilation System.* PNNL-DSA-RPL, Rev 0, *Radiochemical Processing Laboratory Documented Safety Analysis* Gap Analysis: None	DOE-HDBK-1169 (2.4) ASHRAE Design Guide

EVALUATION CRITERIA	DISCUSSSION	REFERENCE
Confinement ventilation systems shall have appropriate filtration to minimize release.	In the safety basis, neither the main building exhaust ventilation system nor REVS is required to operate in abnormal or accident conditions. The REVS is not credited with reducing the consequences of any releases addressed in the DSA accident analysis and is cited in the DSA accident analysis as DID for four accidents (unlikely fire, unlikely explosion, unlikely spill and an anticipated seismic event). Primary and final HEPA filtration is provided for the building's main exhaust ventilation system. Individually, both the primary filters and the final filter banks are rated at reducing particulate discharges by 99.95%. The REVS contains the final filter banks. There are no provisions at the 325 Building for reducing releases of tritium or other radioactive gases. References: PNNL-RPL-SDD-REVS, Rev 2, *System Design Description, Radioactive Exhaust Ventilation System.* PNNL-DSA-RPL, Rev 0, *Radiochemical Processing Laboratory Documented Safety Analysis* Gap Analysis: None	DOE-HDBK-1169 (2.2.1) ASME AG-1
	DID Performance Criteria Ventilation System - Instrumentation and Control Criteria	
Provide system status instrumentation and/or alarms.	Control and monitoring instrumentation is provided for individual REVS components. They are: • differential pressure (Dp) across filter banks • plenum static pressure • local isolation damper indication for the fans • local indication for the HEPA isolation damper position • fan operating status on the control panels • power source indication for the exhaust fans. Operating status of the main exhaust fans is provided at three locations (Filter Building; Power Operators Office; and at the METASYS operating station in the basement); the exhaust fans may also be operated from these same locations. Under normal operating conditions parameters such as fan motor current, inlet damper position, outlet damper position, fan status, motor starter overload, low running motor amps, exhaust static pressure and building static pressure are monitored and displayed by the Johnson Controls METASYS System. The METASYS system is not considered part of REVS.	ASME AG-1 DOE-HDBK-1169, ASHRAE Design Guide (Section 4),

EVALUATION CRITERIA	DISCUSSSION	REFERENCE
	For abnormal or accident conditions, all of the indication listed above, with the exception of the plenum static pressure are available to monitor REVS operability. These indications are not part of nor do they rely on the METASYS system to provide indication. Instruments related to the Compressed Air System (including the emergency compressor) that operate the ventilation system dampers include pressure monitoring and interlocks that operate when minimum or maximum set points are exceeded. (The exhaust dampers fail in the open position, so emergency compressed is only needed if an exhaust fan shuts down and needs to be isolated.) The emergency power switch board provides power to the Main Switchgear Standby Power bus following a loss of normal power or directly to the REVS fans (as well as to the criticality and fire alarm systems). Details are described in the corresponding SDD. References: PNNL-RPL-SDD-REVS, Rev 2, *System Design Description, Radioactive Exhaust Ventilation System.* PNNL-RPL-SDD-ES, *Electrical Power System Design description of the Safety Significant Electrical System.* Gap Analysis: None	
Interlock supply and exhaust fans to prevent positive pressure differential.	The four main supply fans and the four main REVS exhaust fans are interlocked to operate as fan pairs. A fan pair consists of one supply fan and one exhaust fan. REVS faulted condition operation calls for at least one exhaust fan running. Typical system operation is with three fan pairs operating and one pair as backup. The interlocks are configured such that a supply fan can operate only if the corresponding exhaust fan is running. The loss of an operating exhaust fan will automatically shut down the corresponding supply fan. References: PNNL-RPL-SDD-REVS, Rev 2, *System Design Description, Radioactive Exhaust Ventilation System.* Gap Analysis: None	DOE-HDBK-1169, ASHRAE Design Guide (Section 4),
Reliability of control system to maintain confinement function under normal, abnormal and accident conditions.	In the safety basis, neither the main building exhaust ventilation system nor REVS is required to operate in abnormal or accident conditions. The REVS is not credited with reducing the consequences or frequency of any releases addressed in the DSA accident analysis and is cited in the DSA accident analysis as DID for four accidents (unlikely fire, unlikely explosion, unlikely spill and an anticipated seismic event).	DOE-HDBK-1169 (2.4)

EVALUATION CRITERIA	DISCUSSSION	REFERENCE
	During normal conditions, the control systems for the REVS, including the supply fan interlocks, and running status indicators, are sufficient to control and operate the 325 Building ventilation systems. Typical normal operating configuration for the ventilations system is three pairs, (supply and exhaust) fans are operated; two exhaust fans and their associated supply fans are operated in the manual mode with the third exhaust and supply fan operated in "standby" mode with four final stage HEPA filters in service. During the abnormal and accident conditions various components can fail without defeating the minimum operability requirement of the system; the minimum operating configuration is at least one exhaust fan with a filtered release path provided by the final stage HEPA filters. For any loss of electrical normal power event with subsequent supply of back up power, all supply fans and the exhaust fan that was controlled in the "standby" mode will de-energize, and when back-up power becomes available, the two exhaust fans that were operated in manual should restart without operator action. If the final stage HEPA filter banks remain intact, the minimum operating configuration for REVS will be met. Loss of normal power is compensated for with two standby power feeds (standby power to the building from the 300 area supply grid and the onsite diesel generator) to the main building switchgear with automatic switching capability. Further manual start-up capability of the exhaust fans is provided in the filter building in the case of failure of the building's main switchgear or an evacuation of the facility. This redundancy provides a reliable source of power to the main exhaust fans. The portion of the building's electrical distribution system described above is classified as DID for its added layer of protection during normal and upset conditions at the facility. The Compressed Air System is backed up by an emergency compressor and is used to operate the ventilation system dampers on loss of normal compressed air. The exhaust dampers fail in the open position, so emergency compressed air is only needed if an exhaust fan shuts down and needs to be isolated. References: PNNL-RPL-SDD-REVS, Rev 2, *System Design Description, Radioactive Exhaust Ventilation System.* PNNL-DSA-RPL, Rev 0, *Radiochemical Processing Laboratory Documented Safety Analysis* PNNL-SOP-325-HVAC-0, *REVS Operability Requirements* PNNL-SOP-325-ELEC, *Loss of Power* Gap Analysis: None	
Control components should fail	The minimum configuration for operability of the REVS (at least one exhaust fan with a flow path	DOE-HDBK-1169

EVALUATION CRITERIA	DISCUSSSION	REFERENCE
safe.	through the final HEPA filters) is supported by a fail safe design. During normal operation, two exhaust fans are operated in the manual mode and are supplied by automatic backup electrical power if there is a loss of normal electrical power. Supply fans turn off when a paired exhaust fan shuts down. All pneumatic dampers in the REVS system, including HEPA isolation dampers, open on loss of air to the operator or loss of electrical power to the solenoid controlling air flow. This provides an open flow path to and through the passive HEPA filters if it were not possible to start an exhaust fan. When restoration of power to the exhaust fans from one of the standby power sources occurs, the exhaust fans will draw air into the building and discharge it through the HEPAs and out the stack. PNNL-RPL-SDD-REVS, Rev 2, *System Design Description, Radioactive Exhaust Ventilation System.* PNNL-DSA-RPL, Rev 0, *Radiochemical Processing Laboratory Documented Safety Analysis* Gap Analysis: None	(2.4)
	DID Performance Criteria Resistance to Internal Events - Fire	
Confinement ventilations systems should not propagate spread of fire.	In the safety basis, neither the main building exhaust ventilation system nor REVS is required to operate in abnormal or accident conditions. The REVS is not credited with reducing the consequences or frequency of any releases addressed in the DSA accident analysis and is cited in the DSA accident analysis as DID for four accidents (unlikely fire, unlikely explosion, unlikely spill and an anticipated seismic event). For a fire in a laboratory that occurs in a fume hood or glove box, an opportunity for entraining products of combustion (gas, soot, embers) might be provided, however the probability that the fire would propagate is unlikely. The majority of the ductwork is located unconfined in the large basement space or the 325 Building and the ventilation system itself is nonflammable. The REVS does not pass through combustible walls or construction. The vertical path from glove boxes and fume hoods to the basement fume hood provides the first barrier to propagating hot particulates through the ventilation system. As air and entrained materials flow through the ventilation duct, heat loss will occur as there is no insulation of the ductwork. The primary filter assembly provides the second barrier to particulates and will start to load. The filter assembly may heat up due to trapped material, but there is no exposure of the filter housing to combustibles in the basement area. Should burn-through of the filter occur, the ventilation path	DOE-HDBK-1169 (10.1) DOE-STD-1066

EVALUATION CRITERIA	DISCUSSSION	REFERENCE
	proceeds passing through the primary filter and is routed upwards to a main exhaust duct; this vertical flow provides a third barrier to propagating hot particles. The duct at the outlet of the primary HEPA filters joins other primary filter ducts, combining into ever larger ducts and then finally to the exhaust plenum that defines the upstream boundary of REVS. This flow path is un-insulated, allowing for dissipation of residual heat, and encounters no combustible penetrations. Together these flow paths and associated barriers present a tortuous path to fire propagation. The design of the exhaust ventilation system minimizes the likelihood that the ventilation system may propagate a fire. There are no automatic shutdown systems based upon fire detection or alarms. For most fires and fire situations, the 325 Building ventilation systems are left on and running in order to provide the maximum possible pressure zone control and contamination release control. The emergency response procedures allow shutdown of the ventilation system by the Building Emergency Director if required. References: PNNL-RPL-SDD-REVS, Rev 2, *System Design Description, Radioactive Exhaust Ventilation System.* PNNL-DSA-RPL, Rev 0, *Radiochemical Processing Laboratory Documented Safety Analysis* PNNL-BEP-RPL, Rev 2007, *RPL Building Emergency Procedure* Drawing H-3-310436, *HVAC Exhaust Area 12 Basement Ember Screen Replacement* Gap Analysis: None	
	DID Performance Criteria Testability Criteria	
Design supports the periodic inspection and testing of filters and housing, and tests and inspections are conducted periodically	The HEPA filters in the exhaust systems serving the "hot" areas (contaminated and potentially contaminated spaces) are inspected prior to installation. They are annually tested to meet the particulate reduction standard of 99.95% and are replaced if they do not meet the standard. The final bank filter housings are designed with upstream aerosol injection points for testing and downstream access for detection testing. Filter Dp measurements are continuously displayed at the filter location and can also dictate the need for filter replacement if the Dp is high and indicates that the filter has reached its end of serviceability. Primary filters (part of the non-REVS portion of the building exhaust ventilation system are also inspected prior to installation, and are annually tested to meet the particulate reduction standard of 99.95% or are replaced. Primary filter housings are designed with upstream aerosol injection	DOE-HDBK-1169 (2.3.8) ASME AG-1 ASME N510

EVALUATION CRITERIA	DISCUSSSION	REFERENCE
	points for testing and downstream access for detection testing. Filter Dp measurements are typically available at the filter location and can also dictate the need for filter replacement if the Dp is high and indicates that the filter has reached its end of serviceability. References: PNNL-RPL-SDD-REVS, Rev 2, *System Design Description, Radioactive Exhaust Ventilation System.* PNNL-55440, *Final Stage HEPA Filters Set #5* Gap Analysis: None	
Instrumentation required to support system operability is calibrated	The 325 Building has an established calibration program for instruments that is part of the Facility Operations Preventative Maintenance program. Instruments monitoring the building's exhaust ventilation systems include pressure, flow, temperature, pressure switches, and chart recorder devices. Instruments related to the Compressed Air System (including the emergency compressor) that operate the ventilation system dampers include pressure monitoring and interlocks that operate when minimum or maximum set points are exceeded. The calibration program defines the interval between testing and includes the use of externally calibrated devices to reset ventilation system components. The Facility Operations Preventative Maintenance program is applicable to both REVS and the non-REVS portion of the building exhaust ventilation system. Calibration is performed by PNNL Instrumentation Services and Technologies. The calibration history for any instrument is maintained in the calibration services records. References: PNNL-RPL-SDD-REVS, Rev 2, *System Design Description, Radioactive Exhaust Ventilation System.* calibration@pnl.gov, *PNNL Instrumentation Services and Technologies* Gap Analysis: None	DOE-HDBK-1169 (2.3.8)
	DID Performance Criteria Maintenance Criteria	
Filter service life program should be established	The 325 Building facility has established an annual in service performance testing program for the exhaust HEPA filters that examines filter efficiency and Dp across the filter and includes a visual inspection for damage. The preventative maintenance program includes provisions for "end of life" monitoring and evaluations. The facility also monitors the radiation contact dose fields at the primary filters and has a program in place to remove the filters prior to their doses creating a difficult change out process. The existing filters were installed in 2004 with an expected design life of 10 years (per the DOE Handbook) listed in MAXIMO (the RPL Master Equipment List). Component life cycle management of the filters is addressed using a risk based life cycler	DOE-HDBK-1169 (3.1 and App C)

EVALUATION CRITERIA	DISCUSSSION	REFERENCE
	management approach and includes PMs and performance monitoring. The 325 Building meets the ten year maximum life stipulation, DOE-HDBK-1169-2003, *Nuclear Air Cleaning Handbook.* References: PNNL-RPL-SDD-REVS, Rev 2, *System Design Description, Radioactive Exhaust Ventilation System.* PNNL-ADM-360, *Risk Based Life Cycle Asset Management.* PNNL- ADM-08, *Predictive/Preventative Maintenance Program.* PNNL-ADM-CM-26, *System Performance Monitory*. PNNL-55440, *Final Stage HEPA Filters Set #5* DOE-HDBK-1169-2003, *Nuclear Air Cleaning Handbook.* Gap Analysis: None	

EVALUATION CRITERIA (not applicable to DID systems)	DISCUSSSION	REFERENCE
	SS Performance Criteria Ventilation system - Instrumentation and Control Criteria	
Post accident indication of filter break-through.	In the safety basis, neither the main building exhaust ventilation system nor REVS is required to operate in abnormal or accident conditions. The REVS is not credited with reducing the consequences or frequency of any releases addressed in the DSA accident analysis and is cited in the DSA accident analysis as DID for four accidents (i.e. Unlikely fire, Unlikely explosion, Unlikely spill and an Anticipated seismic event). Filter Dp measurements are continuously displayed at the filter location and can show the need for filter replacement if the Dp is high, indicating that the filter has reached its end of serviceability. Each of the four final filter banks has a local Dp instrument. Because the REVS is not credited with reducing the consequences or frequency of any accident, there are no specific requirements for monitoring for filter breakthrough and no monitoring is required in the exhaust stack. References: PNNL-RPL-SDD-REVS, Rev 2, *System Design Description, Radioactive Exhaust Ventilation System.* Gap Analysis: None	TECH-34
	SS Performance Criteria	

EVALUATION CRITERIA (not applicable to DID systems)	DISCUSSSION	REFERENCE
	Resistance to Internal Events - Fire	
Confinement ventilation systems should withstand credible fire events and be available to operate and maintain confinement.	In the safety basis, neither the main building exhaust ventilation system nor REVS is required to operate in abnormal or accident conditions. The REVS is not credited with reducing the consequences from any credible fire events addressed in the DSA accident analysis and it is not assigned an SS safety function. The REVS is cited in the DSA accident analysis as DID for four accidents (unlikely fire, unlikely explosion, unlikely spill and an anticipated seismic event). References: PNNL-DSA-RPL, Rev 0, *Radiochemical Processing Laboratory Documented Safety Analysis*	DOE-HDBK-1169 (10.1) DOE-STD-1066
	SS Performance Criteria Resistance to External Events – Natural Phenomena - Seismic Criteria	
Confinement ventilation systems should safely withstand earthquakes.	In the safety basis, neither the main building exhaust ventilation system nor REVS is required to operate in abnormal or accident conditions. The REVS is not credited with reducing the consequences from seismic events addressed in the DSA accident analysis and it is not assigned a Safety Significant safety function. The REVS is cited in the DSA accident analysis as DID for four accidents (unlikely fire, unlikely explosion, unlikely spill and an anticipated seismic event). References: PNNL-DSA-RPL, Rev 0, *Radiochemical Processing Laboratory Documented Safety Analysis*	ASME AG-1 AA DOE-HDBK-1169 (9.2) DOE O 420.1B
	SS Performance Criteria Resistance to External Events – Natural Phenomena - Tornado/Wind Criteria	
Confinement ventilation system should safely withstand tornado depressurization.	In the safety basis, neither the main building exhaust ventilation system nor REVS is credited for operating in during a tornado event. References: PNNL-DSA-RPL, Rev 0, R*adiochemical Processing Laboratory Documented Safety Analysis*	DOE-HDBK-1169 (9.2) DOE O 420.1B
Confinement ventilation system should withstand design wind effects on system performance.	In the safety basis, neither the main building exhaust ventilation system nor REVS is credited for operating in during a design wind event. References: PNNL-DSA-RPL, Rev 0, *Radiochemical Processing Laboratory Documented Safety Analysis*	DOE-HDBK-1169 (9.2) DOE O 420.1B
	SS Performance Criteria Other Natural Phenomenon Events (e.g. flooding, precipitation)	
Confinement ventilation system should withstand other natural phenomenon events considered credible in the DSA where the	In the safety basis, neither the main building exhaust ventilation system nor REVS is credited for operating in during other kinds of NPH events. References:	DOE-HDBK-1169 (9.2) DOE O 420.1B

EVALUATION CRITERIA (not applicable to DID systems)	DISCUSSSION	REFERENCE
confinement ventilation system is credited.	PNNL-DSA-RPL, Rev 0, *Radiochemical Processing Laboratory Documented Safety Analysis*	
	SS Performance Criteria Range Fire/Dust	
Administrative controls should be established to protect confinement ventilation systems from barrier threatening events.	The RPL Building Emergency Procedure is implemented to minimize risk to workers, the Building 325 facility and the environment in case of emergency and includes consideration of such events as explosion, loss of services, bomb threats and incidents at other facilities. The RPL Technical Safety Requirements define nuclear safety controls that protect the workers and public but also contribute to preventing barrier threatening events. Key applicable programs defined in the TSR are the Radioactive Material Evaluation Program, the Radiation Protection Program, the Fire Protection Program, Nuclear Criticality Safety Program and the Worker Safety Program. PNNL uses the SBMS to implement administrative requirements at all its facilities including the 325 Building. SBMS provides Laboratory staff online access to policies, standards, and subject areas (Laboratory-wide staff requirements and guidelines) that are current, accurate, concise, and relevant to the work they perform. SBMS information is based on the applicable and appropriate set of external documents, corporate policies, and best business practices. References: BEP-RPL, *325 RPL Building Emergency Procedure* PNNL-TSR-RPL, *Radiochemical Processing Laboratory Technical Safety Requirements.*	DOE O 420.1B
	SS Performance Criteria Testability Criteria	
Integrated system performance testing is specified and performed.	In the safety basis, neither the main ventilation system nor REVS is required to operate in abnormal or accident conditions. The ventilation system is not credited with reducing the consequences from seismic events addressed in the DSA accident analysis and it is not assigned an SS safety function. No required response times or times are levied on the system. The REVS is cited in the DSA accident analysis as DID for four accidents (unlikely fire, unlikely explosion, unlikely spill and an anticipated seismic event). Preventative Maintenance procedures PM-16071 *Main Switchgear ATS and HVAC Controls Surveillance* and PM-55440 *Final Stage HEPA Filters Set #5* provide specific annual testing and operability requirements and are performed per requirements of the PNNL-TSR-RPL *325 Building Technical Safety Requirements (TSR)* and the Facility Operations Preventative Maintenance	DOE-HDBK-1169 (2.3.8)

EVALUATION CRITERIA (not applicable to DID systems)	DISCUSSSION	REFERENCE
	Program. References: PNNL-DSA-RPL, Rev 0, *Radiochemical Processing Laboratory Documented Safety* Analysis. PNNL-TSR-RPL, Rev 0, *RPL Technical Safety Requirement (TSRs)* PNNL-RPL-PM-55440, *Final Stage HEPA Filters Set #5*	
	SS Performance Criteria Single Failure Criteria	
Backup electrical power shall be provided to all critical instruments and equipment required to operate and monitor the confinement ventilation system.	In the safety basis, neither the main ventilation system nor REVS is required to operate in abnormal or accident conditions. The ventilation system is not credited with reducing the consequences or frequency of accidents addressed in the DSA accident analysis and it is not assigned an SS safety function. The REVS is cited in the DSA accident analysis as DID for four accidents (unlikely fire, unlikely explosion, unlikely spill and an anticipated seismic event), and is provided with backup power. Loss of power to facility essential loads is compensated for with two power feeds (normal and standby) to the main building switchgear with automatic switching capability and in addition, a back up generator, also with automatic switching capability. Further manual switching capability for REVS is provided in the filter building in the case of failure of the building's main switchgear or an evacuation of the facility. This redundancy provides a reliable sources of power to the main exhaust fans. References: PNNL-RPL-SDD-REVS, Rev 2, *System Design Description, Radioactive Exhaust Ventilation System.* PNNL-DSA-RPL, Rev 0, *Radiochemical Processing Laboratory Documented Safety Analysis* PNNL-SOP-325-ELEC, *Loss of Power* Gap Analysis: None	DOE-HDBK-1169 (2.2.7)
	SS Performance Criteria Other Credited Functional Requirements	
Address any specific functional requirements for the confinement ventilation system (beyond the scope of those above) credited in the DSA	The safety basis does not require any additional functional requirements for the main ventilation system or the REVS beyond those already discussed. References: PNNL-DSA-RPL, Rev 0, *Radiochemical Processing Laboratory Documented Safety Analysis*	10 CFR 830, SubpartB

Appendix C – Facility Evaluation Team

Facility Evaluation Team

Garill Coles, PNNL project safety basis engineer
Brad Evans, PNNL project safety basis engineer
Art Stithem, PNNL facility safety basis engineer
Dan Wandler, PNNL 325 Building engineer
Francis Buck, PNNL 325 Building manager

The Facility Evaluation Team conducted general walk-downs of the ventilation system with an emphasis on REVS, including the interior facility system, its boundaries, major components, and the Filter Building (where accessible). The walk-down was performed the week of April 9.

In addition to the Facility Evaluation Team, the following also toured the facility and witnessed the activities and walk-down performed by the team:

Jeff Carlson, PNSO
Ron Higgins, PNSO
Charlie O'Dell, DOE-HQ (EM)
Russ Warren, PNSO
Scott Foster, DOE-ORO.