HANDOUT

RH Waste Process Flow, Simplified 21 Step Process Description

Empty Cask Handling and Shipment to NTS as LLW, 11 Steps

72-B Cask Receipt, Loading and Shipment, 11 Steps

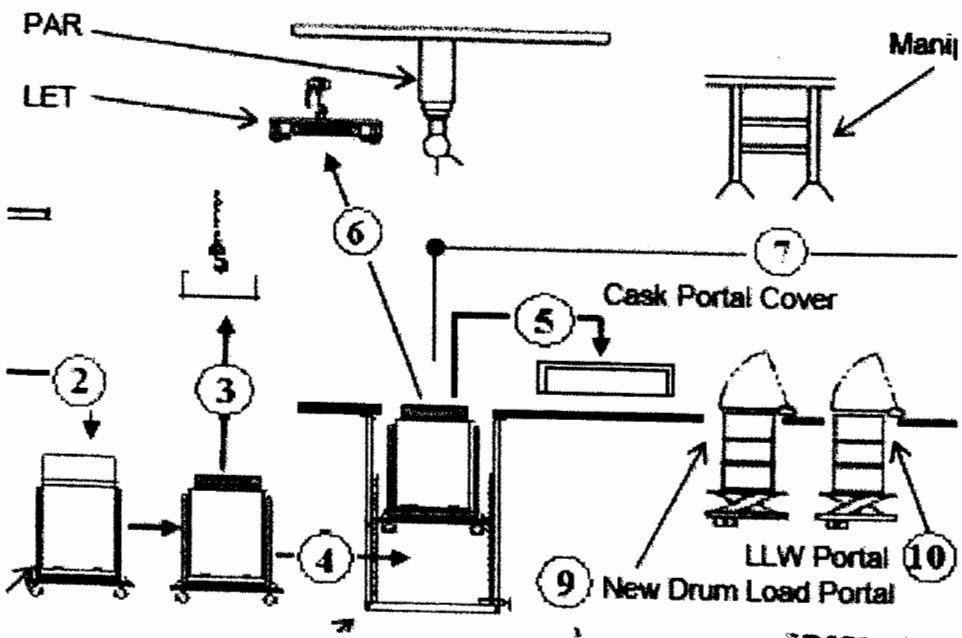

UNCLASSIFIED
Gabe Marciante
DOE 3/26/08
Date

TWENTY ONE STEPS FOR RH PROCESSING

(1) **RH Cask is delivered from DOE.** RH debris waste is delivered to the TWPC in a concrete cask inside a steel RH Cask Overpack. The exterior surfaces of the overpack are inspected and surveyed as part of receipt requirements.

(2) **Load Cask onto the RH Cask Bogie on the 30-Ton Crane Pad.** The overpacks will be received in the 30-ton Crane Bay where the overpack will moved to the neutron/gamma shield on the RH Cask Bogie.

(3) **Remove the Overpack Lid.** Following the surveys, the RH Cask Overpack Lid is removed exposing the concrete cask lid. Preparations are made based on the type of cask to allow lid removal in the Hot Cell.

(4) **Move RH Bogie to the Lift system inside the WPF.** The cask/overpack/shield assembly is transferred into the facility through the RH Cask Bay (Room 143) to the RH Cask Airlock in Room 127. Inside the RH Cask Airlock the assembly will be connected to a large bag-in/bag-out portal (RH Cask Portal) located on the underside of the Hot Cell. A triple seal (bag, inflatable seal, and static seal) will preclude the spread of contamination to the exterior surfaces of the cask/overpack assembly from waste materials or from the Hot Cell environment. After the bogie is driven into the RH Cask Airlock, it is then driven into position to align the bogie lift plate alignment holes with the corresponding alignment pins on the Bogie Lift Weldments on the RH Cask Bogie Lift.

(5) **Remove RH Cask Portal Cover using the 5-ton hoist in the hot cell.** To gain access to the RH Cask lid the shielded RH Concrete Cask Portal cover will be removed using the Hot Cell crane. The 5-ton hoist in the hot cell engages the lifting lug of the Concrete Cask Portal Cover and lifts the portal cover from the Concrete Cask Entry Portal. The portal cover is placed at the portal cover storage location, south of the cask entry portal in the hot cell

(6) **Remove Cask Lid with LET.** The Hot Cell 5-ton hoist is used to remove the concrete cask lid and place it in the designated storage area using the hydraulic Lid Extraction Tool (LET). The Lid Extraction Tool is a lifting fixture that is capable of both lifting the cask lid and separating (prying) the cask lid from the cask body. It is a hydraulically actuated mechanism that is used to independently drive four wedges into the cask/lid interface with the objective of prying apart the asphalt mastic seal between the cask and lid. When the cask lid has been pried loose, the wedges are fully extended under the lid to support the lid for removal from the cask.

(7) **Use PaR to Remove the Cask Contents.** Cask contents are expected to include 3 gallon plastic buckets, gallon "paint can" containers, bags, miscellaneous waste from breached packages and any other debris items. The waste will be removed using an overhead mast-mounted (PaR) manipulator crane. The manipulator typically uses the installed grippers or end effectors to grasp the 3 gallon plastic pails, 1 gallon paint cans, bagged debris, and loose materials. Items removed from the concrete cask will be moved to the work table to facilitate sorting/segregation. Cameras located on the manipulator and the overhead crane, and fixed within the Hot Cell, will provide the capability for 100% Visual Examination (VE) on all waste handling in the Hot Cell. Some items removed from the cask are oversized such that they cannot be placed into a 55 gallon drum. These items are size reduced using the Pivot Shear and other size reduction tools that would be employed through the use of the overhead power manipulator or the master slave manipulators.

Based on the results of Acceptable Knowledge (AK), TWPC receipt surveys, or interrogations performed at the CH drum load station, waste determined to meet CH TRU criteria will be removed from the Hot Cell for processing as CH waste via the CH drum portal.

Waste items greater than 200 mrem/hr will be moved to the Hot Cell sorting table for Visual Examination (to meet WIPP requirements) and placement in an RH container.

(8) **CH Drum-out.** The portal in the Hot Cell on the north end of the sorting table is dedicated to CH waste removal for treatment and sorting. CH drums will be loaded with the objective of ensuring that contact dose rates remain below 200 mrem/hr. RH verses CH segregation will be performed to ensure that CH waste is not shipped or packaged as RH in an RH 72-B Canister. Waste that meets CH criteria placed in the 55-gallon drum at the CH Drum Portal is bagged-out of the Hot Cell. At this point the drum proceeds through the CH waste process in a manner similar to CH Drums received directly from DOE (including NDA, NDE, and Container Management Program compliance).

(9) **Operate the New Drum Portal.** As needed, this portal is used to transfer new 55-gallon drums for RH waste into the Hot Cell.

(10) **Operate the LLW Portal.** As needed., this portal is for inserting material and LLW load out of the Hot Cell.

(11) **Perform RH Drum Handling.** As needed, after RH drums have been loaded the lid, with a NucFil® filter installed, is installed and the drum is placed in storage for drum aging and equilibration. The drum lid is secured with a closure ring using the PaR manipulator and appropriate tooling (tooling not required for the Skolnik Quick Lever Closure Ring™ or similar lever-type closure ring). The RH debris drum will be subject to random selection for HSGS as required by WIPP procedures. Without additional layers of confinement, the RH drums requiring HSGS will be subject to a 4-day drum aging period which includes the equilibration period of 72 hours. Drums will be place in HSGS staging racks in the Hot Cell until completion of this 4-day period.

Perform Dose to Curie/HSG and Canister Loading. Prior to loading each drum will be placed into a shielded survey station where dose-to-curie (DTC) data will be obtained. Measurements are taken at 4 points, 90 degrees apart, at 1 meter + 6.55mm (i.e., 0.258 inches) measured from detector centerline to drum edge. Surface contact dose rate must also be verified to be >200mr/hr on at least one point on the drum. Following determination of the DTC measurement and verifying the contact dose rate is at least 200mr/hr and not more than 1000R/hr, the TRU content is determined to confirm more than 100 nCi/g. As required, drums will be sampled for Head Spaced Gas following adequate drum aging and temperature equilibration. HSG samples will be collected in SUMMA® through the drum sample septum, using the same basic approach employed for CH Waste. Headspace gas sampling will be required on at least ten (10) drums from a defined lot (for each waste stream) and then on a random selection basis from the remaining drums in the waste stream. The samples will be taken following the drums meeting the 4-day DAC and concurrent 72 hour equilibration period in the Hot Cell. The samples will be sent to the WIPP certified Idaho laboratory for analysis.

(12) **Load Canister.** After HSGS, if required, and completion of Dose to Curie Assay the drums are loaded into the 72-B Canister. Three 55-gallon drums will be loaded into each 72-B canister. The ¼-ton hoist will be used to lift the drums and lower them into the 72-B Canister. The ¼-ton hoist positions the drum above the RLC and lowers the drum into the portal, into the RLC, and the hook is disconnected and raised. When all three drums have been loaded into the RLC, the RH Solids Portal Cover is closed.

(13) **Move to loaded 72-B Canister to the Lid Station.** After the 72-B Canister is filled it is decoupled from the HOT Cell and moved to the canister closure station area. To decouple, the operator monitors the camera inside the RH Solids Filling Station and raises the 72-B Canister Filling Port Fill Tube to separate the fill port from the top of the canister and thus extend the sleeving between the two locations. The operator then drives the 72-B Canister Bogie Turntable to twist the sleeving between the fill tube and the RLC. When the sleeving has been twisted appropriately, the operator accesses the RH Solids Filling Station to continue with the bag-out process. The canister end of the sleeving is pushed, using a remote tool, into the RLC.

(14) **Move Canister and Place RLC Lid.** To move the canister bogie, the personnel access shield doors are closed, the shield doors between the RH Solids Filling Station and Canister Lidding Station are opened, and the bogie is driven into position below the Canister Closure Station transfer portal for lid installation. A Vented 72-B canister lid will be placed on the 72-B canister.

(15) **Prep for Storage.** Once the RLC is lidded, the Canister Closure Station portal cover is removed using the Pintle grapple (either electro-mechanical or (proposed) manual grapple).

(16) **Remove Canister Storage Room Portal.** After the canister is lidded, it is moved into Storage in the Canister Storage Room. First, the Canister Transfer Portal Cover is removed to facilitate the movement of the loaded 72B Canister.

(17) **Move Canister to Storage Rack.** After the portal is removed the canister grapple is positioned above the RLC pintle and it then is lowered onto the canister to engage the RLC pintle. The grapple is engaged and the RLC is raised into the Canister Storage Room and placed in a storage rack or placed in one of the storage wells..

(18) **Loading 72-B Canister into 72-B Cask.** In preparation for loading the 72-B Cask, the 72-B Road Cask transfer shield is positioned to align with the canister transfer portal and the bore of the cask. The shine shield is then lowered in preparation for canister loading into the cask. Next, the Cask Load Portal cover must be opened. The RLC is then placed in the 72-B Cask using the canister grapple. After loading the Cask Load Portal cover is replaced.

(19) **Prepare 72-B Cask for Shipment after the Canister is Loaded into the 72-B Cask.** The transfer shield is moved and preparations are made to install the ICV and OCV lids.

(20) **ICV and OCV lid Installation.** First the ICV lid is raised to the raised, installation position. The cask bogie is driven remotely to position the cask directly under the ICV lid. Using the remote camera, the hoist is remotely lowered to lower the ICV into position on the seating surface. With the ICV lid in place, the radiation levels in the 72-B Cask Bay allow for personnel entry. The IV lid bolting is installed and torqued. The OCV lid is installed and bolting is installed and torqued.

(21) **Ship the RH 72-B Cask to WIPP.**

21 Steps RH Waste Processing

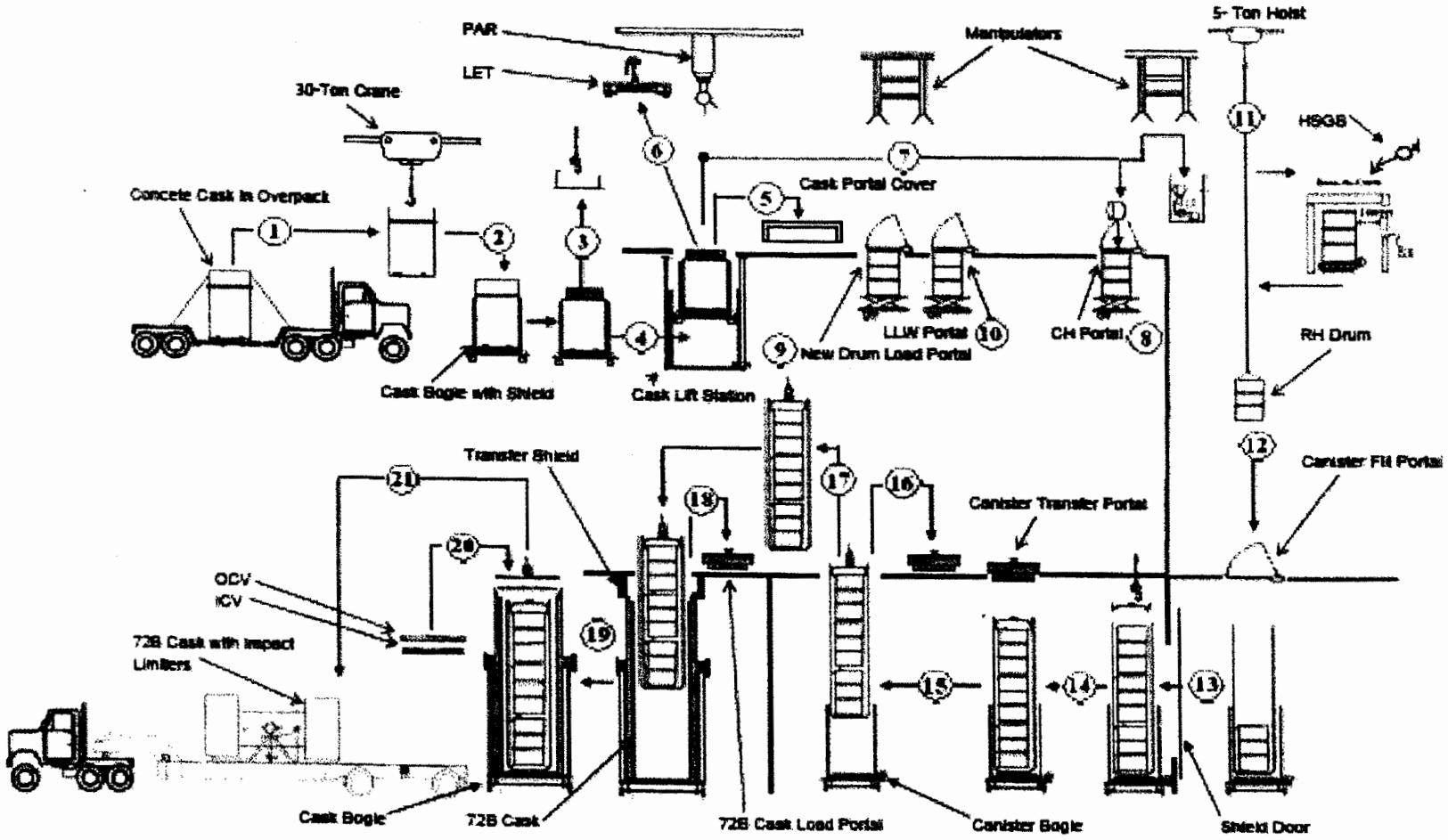

Empty Cask Handling and Shipment to NTS as LLW, 11 Steps		
1	Replace Cask Lid and Install Portal Cover	Following unloading the debris from the cask, the cask is prepared for unmating from the hot cell. The cask will be inspected to ensure that all waste material has been removed from the cask and that the cask contains no free liquids. When the cask has been inspected and is ready for relidding, the LET (which retains the lid from the removal process) is lifted with the 5-ton hoist, and is positioned over the cask body. When the lid is reinstalled, the LET is raised, moved to the LET storage location and disengaged from the 5-ton hoist. The 5-ton hoist then retrieves the RH Cask Portal Cover, and lowers the portal cover over the cask lid, into position on the RH Cask Portal.
2	Lower Cask Bogie Extending Sleeve.	With the portal cover installed, personnel may access the RH Cask Airlock and proceed onto the upper deck of the RH Cask Lift in preparation for bagout activities. The inflatable seal on the Concrete Cask Penetration is deflated to release the primary seal and release the grip on the overpack and sleeving. The lift platform is lowered to allow the sleeving to be extended in preparation for bagout.
3	Heat Seal or Twist Sleeve	When the overpack is at the proper elevation for bagout, the sleeving is straightened out using clamps and bungie cords to flatten out the folds for heat sealing. The heat sealer is employed to seal the sleeve or it may be twisted prior to cutting by hand.
4	Cut Sleeve	The heat sealer is employed to cut at the sealing interface to complete the bagout, or the sleeve is cut by hand. The bag is pushed into the overpack in preparation for closure of the overpack, and the sleeve remnant is secured to the cask penetration bagging ring as required. Personnel exit the deckplate platform and raise the pivot platforms prior to lowering the bogie. The bogie lift is then fully lowered to reposition the bogie on the floor rails.
5	Move Cask Bogie to 30-Ton Crane Bay	The bogie is then driven out thru the RH Cask Airlock, into the RH Cask Bay where the overpack is surveyed and decontaminated as required. The bogie is driven out of the process building into the 30-ton Crane Bay.
6	Place Overpack Lid	The overpack lid is reinstalled and the bolting is reinstalled and secured. A final survey is performed on the overpack in preparation for shipping the cask to NTS for disposal as LLW.
7	Prep for Shipment	The overpack is prepared for Shipment
8	Prep overpack for loading on Conveyance	The overpack is prepared for loading on the Conveyance
9	Load Overpack on to Conveyance	The overpack is loaded on to Conveyance
10	Prep for Shipment to NTS	The overpack is prepared for shipment to NTS.
11	Ship to NTS	The overpack is shipped to NTS

Empty Cask Handling and Shipment to NTS as LLW

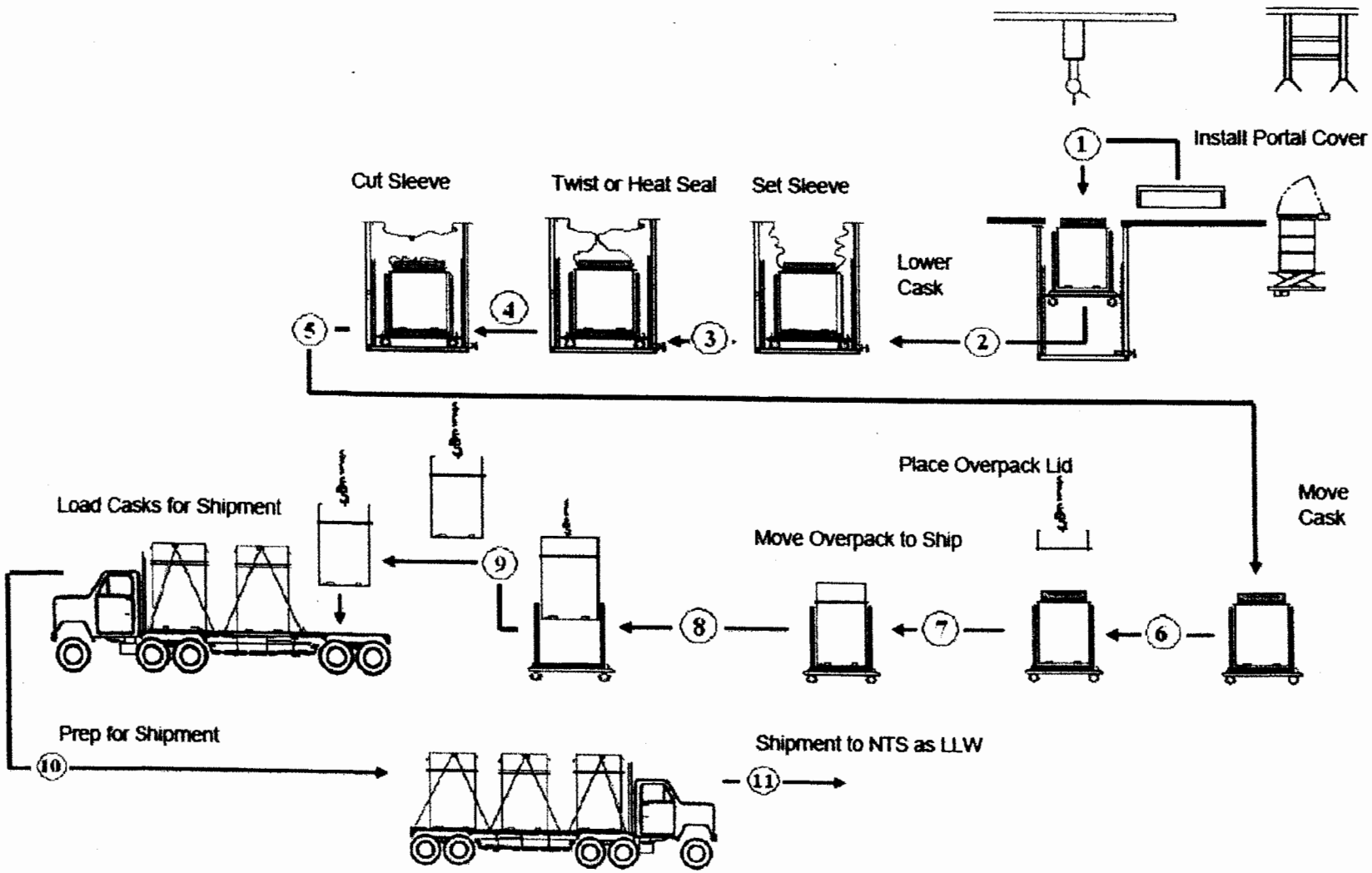

72-B Cask Receipt, Loading and Shipment, 11 Steps		
1	Receive 72-B Cask	The 72-B Road Cask is received from the conveyance vehicle at the TWPC Shipping/Receiving Area (30-ton Crane Bay).
2	Impact limiter Removal	The impact limiters are removed from the cask using the 30-ton crane and are placed at the impact limiter storage location. The cask is lifted from the trailer and rotated to the vertical position using the 30-ton crane and the 72-B Road Cask Lifting Yoke.
3	Prep for removal from Trailer	
4	Remove Cask from Trailer and place on Cask Bogie	The 72-B Road Cask Bogie is positioned as required, and the cask is lowered onto the support yokes of the bogie. The bogie is driven into the Process Building and positioned in the 72-B Cask Bay, under the 2-ton hoist rail. The trailer is repositioned in a staging area, typically off the 30-Ton crane pad.
5	Remove OC and IV Lids	The OC lid closure bolting is removed and the Outer Cask (OC) lid is lifted using the OCV/ICV lid lift fixture and the 2-ton hoist. The OC lid is placed in the OC lid storage location. The Inner Vessel (ICV) closure bolting is removed and the IV lid is lifted using the lid lift fixture and the 2-ton hoist. The ICV lid remains suspended from the hoist (or is lowered without translating the hoist along the support rail) in preparation for reinstallation following cask loading.
6	Position Cask and Load 72-B Canister	The 72-B Road Cask bogie is positioned directly under the canister loading port. The 72-B Road Cask transfer shield is positioned to align with the canister transfer portal and the bore of the cask IV. The shine shield is then lowered in preparation for canister loading into the cask. Next, the shine shield is positioned... The final steps, after data review, certification, and WIPP approval, will be loading of canisters into 72-B Casks for shipping. The 72-B Road Cask portal cover in the Canister Storage Room is removed using the electro-mechanical or (proposed) manual grapple. The RLC is retrieved from the Welding Station, storage silo, or storage rack using the grapple. The RLC is subject to a 100% visual inspection prior to loading the canister into the cask. When the 100% visual inspection is complete, the RLC is positioned above the road cask portal and lowered through the gamma shield and into the IV of the cask. The grapple is disconnected and raised up into the Canister Storage Room. The road cask portal cover is replaced in the Canister Storage Room.

72-B Cask Receipt, Loading and Shipment, 11 Steps		
7	Install IV an OC Lid	First the IV lid is raised to the raised, installation position (if not remaining in the raised position following IV removal). The cask bogie is driven remotely to position the cask directly under the IV lid. Using the remote camera, the hoist is remotely lowered to lower the IV into position on the IV seating surface. With the IV lid in place, the radiation levels in the 72-B Cask Bay allow for personnel entry. The IV lid bolting is installed and torqued. The OC lid is installed and bolting is installed and torqued.
8	Move Cask to Trailer	After the pre-shipment leak rate tests are performed on the cask. A contamination and radiation survey is performed and then the bogie is positioned in the 30-ton Crane Bay and loaded onto the 72-B Road Cask Trailer.
9	Install Impact Limiters	The impact limiters and tiedowns are installed to prepare the cask for shipment.
10	Prep for Shipment	The Cask is prepared for shipment, e.g., tiedowns are installed to prepare the cask for shipment, manifest etc.
11	Ship to WIPP	Ship the loaded 72B Cask to WIPP

RH Waste Processing - Simplified Process Description

72B Cask Receipt, Loading and Shipment

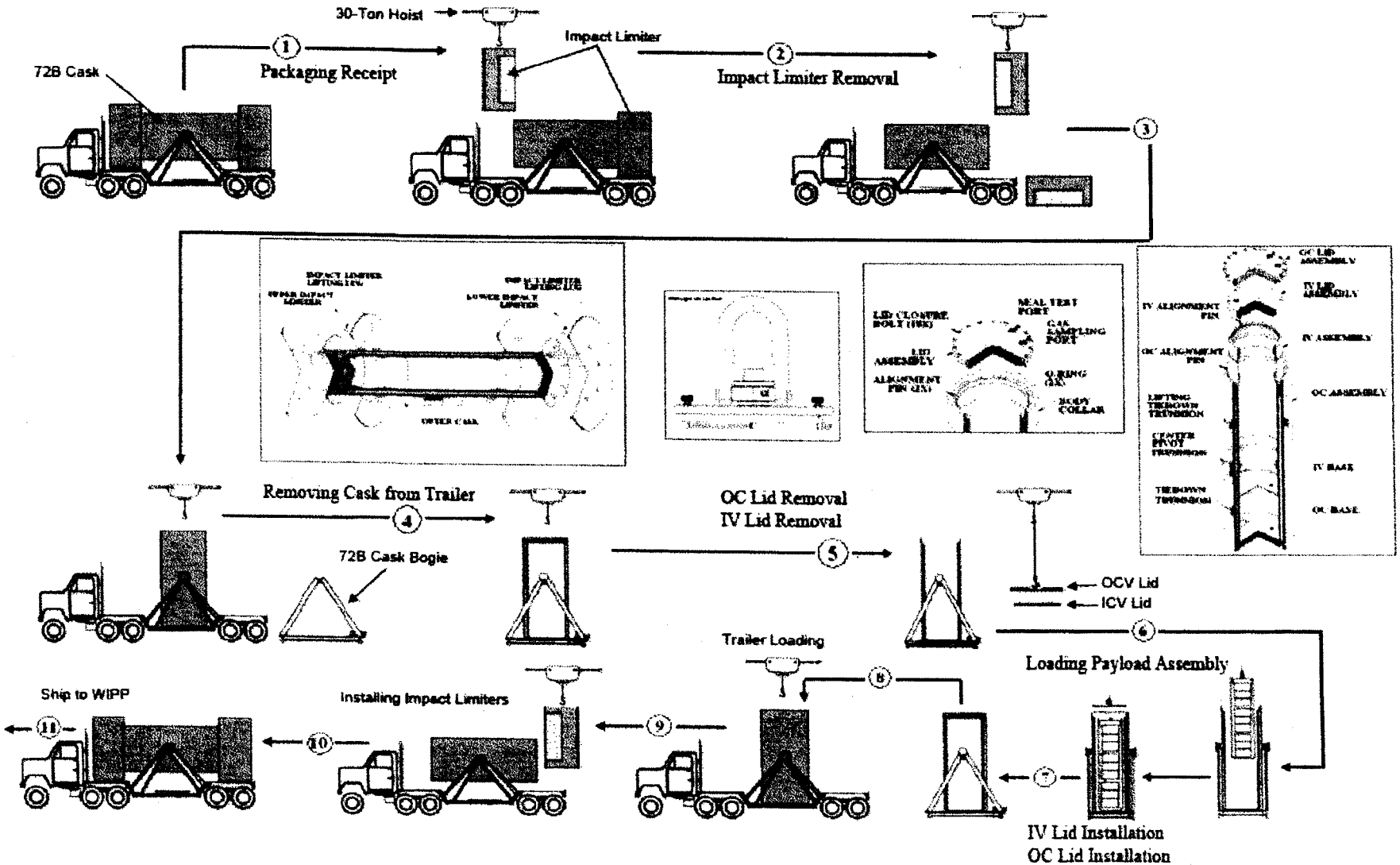

End Document