SAFETY SYSTEM NOTES

20

1. THIS DRAWING CONTAINS SYSTEMS, STRUCTURES, COMPONENTS AND DESIGN FEATURES CREDITED FOR SAFETY.
2. MODIFICATIONS REQUIRE THE FULL RIGOR OF THE CONFIGURATION MANAGEMENT PROGRAM.

GENERAL NOTES

11

1. FILLET WELDS SHALL BE IN ACCORDANCE WITH AWS D1.1-83 SECTION 3.6 IN ADDITION TO THE REQUIREMENTS OF ASME DIVISION 1,SECTION VIII. (14)
2. IMMEDIATELY AFTER PAINTING OF THE CYLINDER TO MEET THE REQUIREMENTS OF SECTION 5.7 OF JSP-533, THE VALVE AND PLUG SHALL BE SEALED WITH SEALS PROVIDED BY THE COMPANY. (16)
3. ACCEPTABLE REPLACEMENT PARTS: (20)

VALVE	EQUIP SPEC JSP-532
PLUG	DWG. M5E-16092-A
VALVE GUARD	PER ANSI N14.1

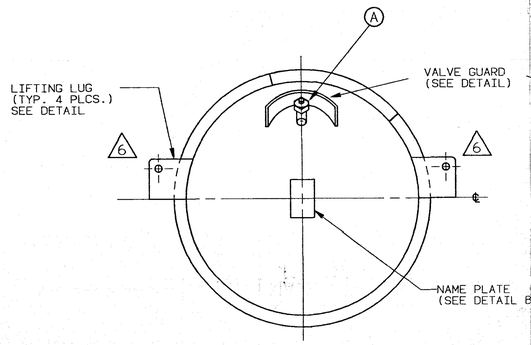

VALVE END

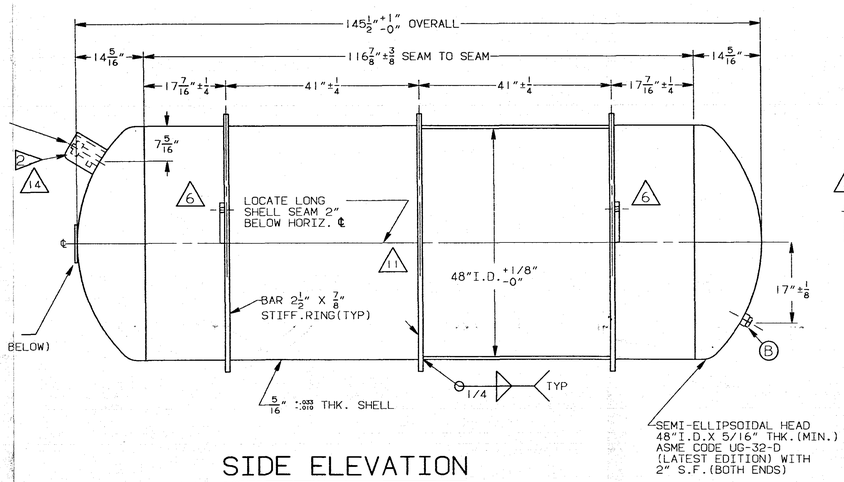

SIDE ELEVATION

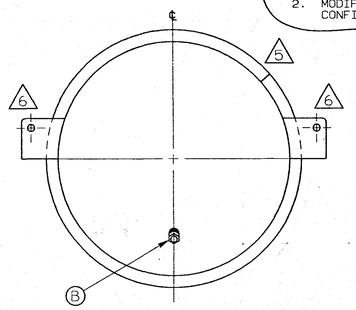

PLUG END

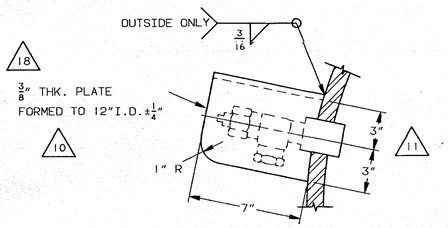

VALVE GUARD

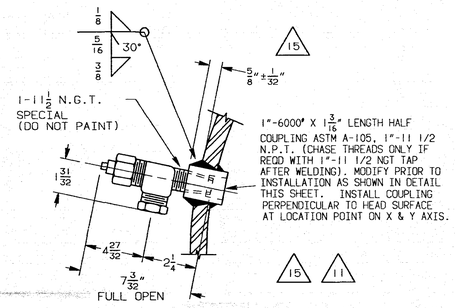

VALVE (A)

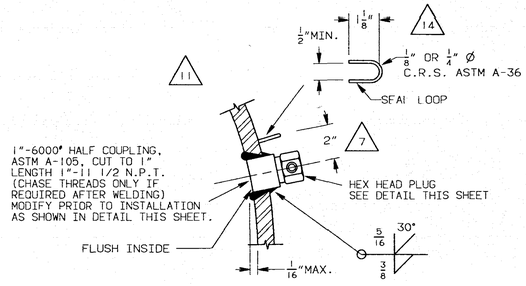

PLUG (B)

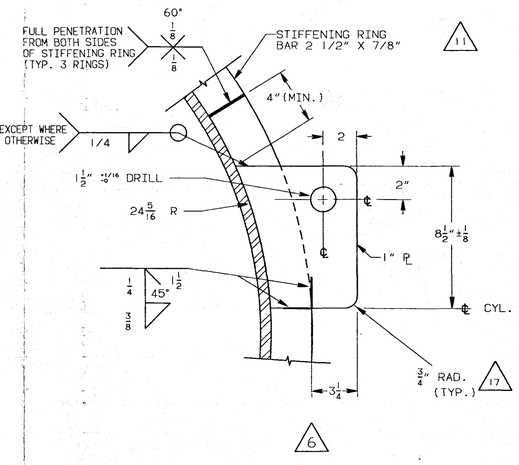

LIFTING LUG

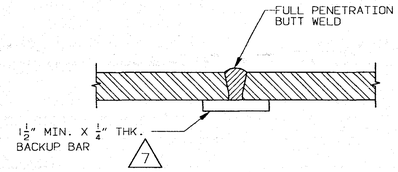

NOTE: AVOID SHARP BREAK

HEAD TO SHELL SEAM

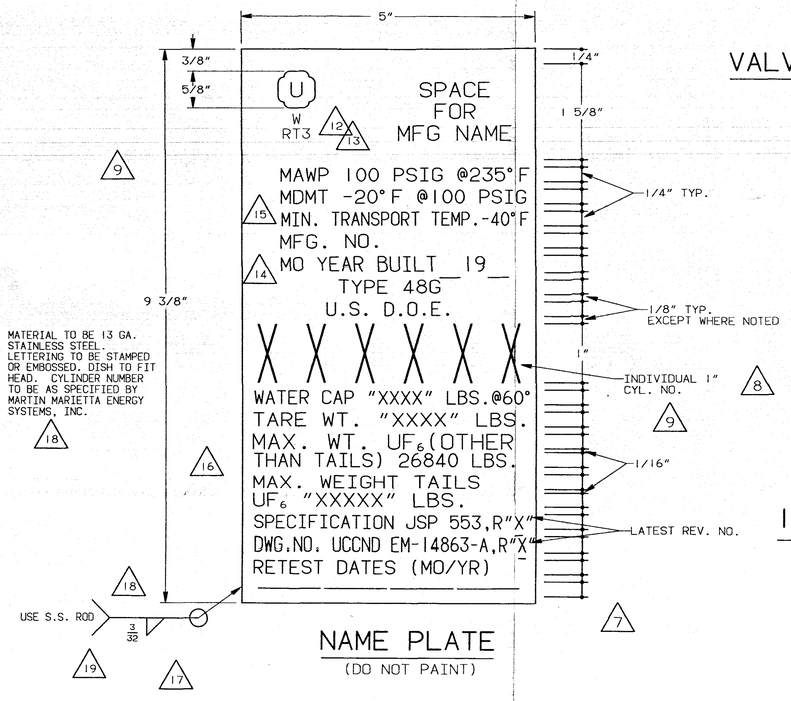

NAME PLATE

(DO NOT PAINT)

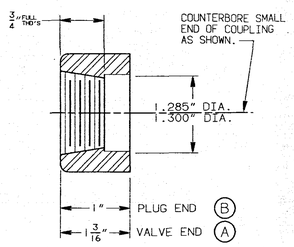

MODIFICATION TO 1" 6000# HALF COUPLING

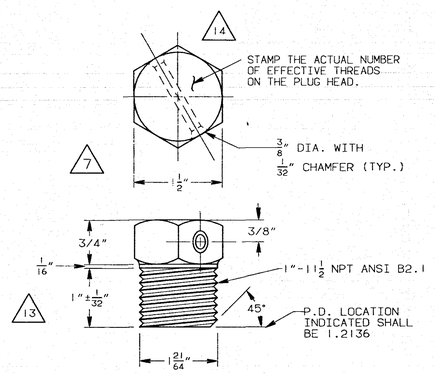

HEX HEAD PLUG

MATL: ALUMINUM BRONZE, CDA ALLOY 613 ASTM B-150. STRESS RELIEVED AT 810°F ±10°F FOR ONE HOUR MIN. UPSET FORGED, EXTRUDED OR EXTRUDED AND DRAWN. (15)

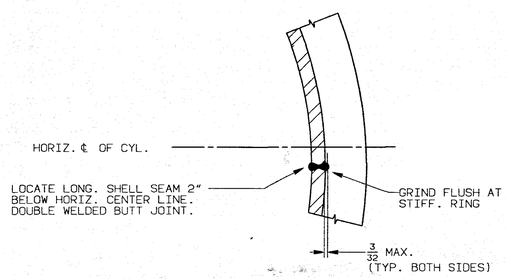

LONGITUDINAL SHELL SEAM

CYLINDER
TYPE 48G

TYPE 48G TAILS CYLINDER