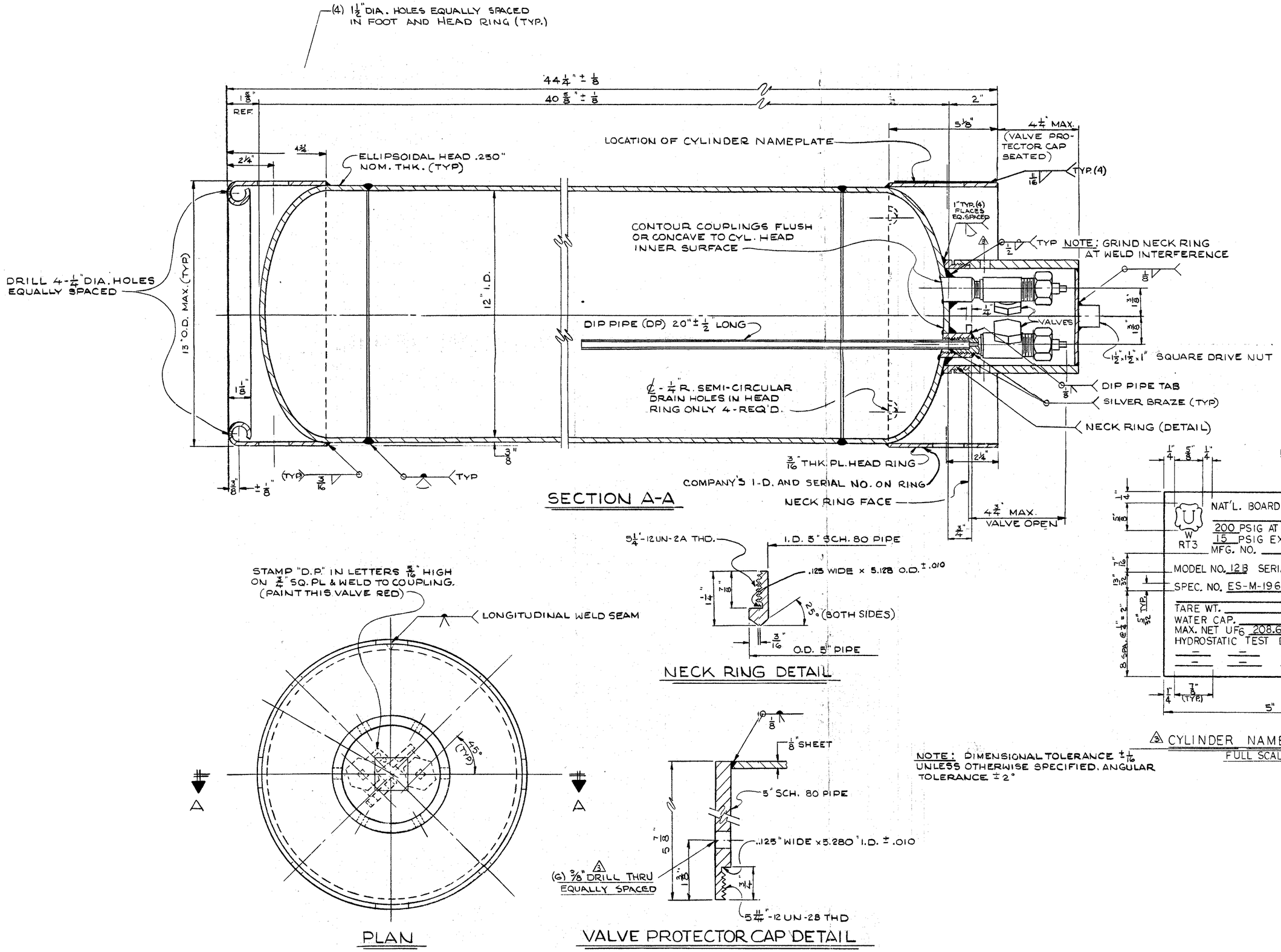

NOTE: DIMENSIONAL TOLERANCE ± 1/16 UNLESS OTHERWISE SPECIFIED. ANGULAR TOLERANCE ± 2°

UF6 CYLINDER
MODEL 12B