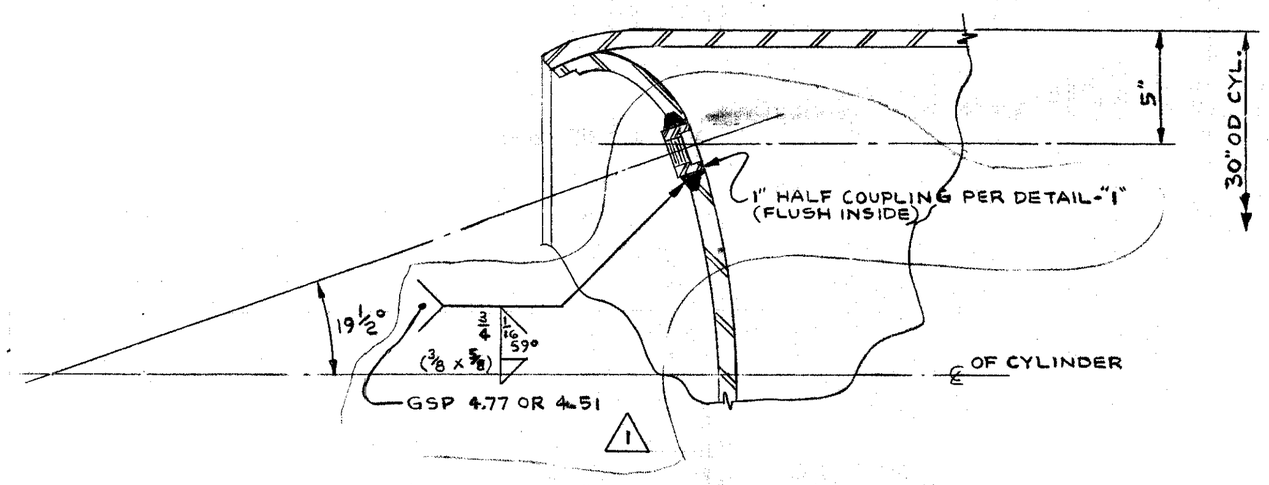

COUPLING INSTALLATION DETAIL

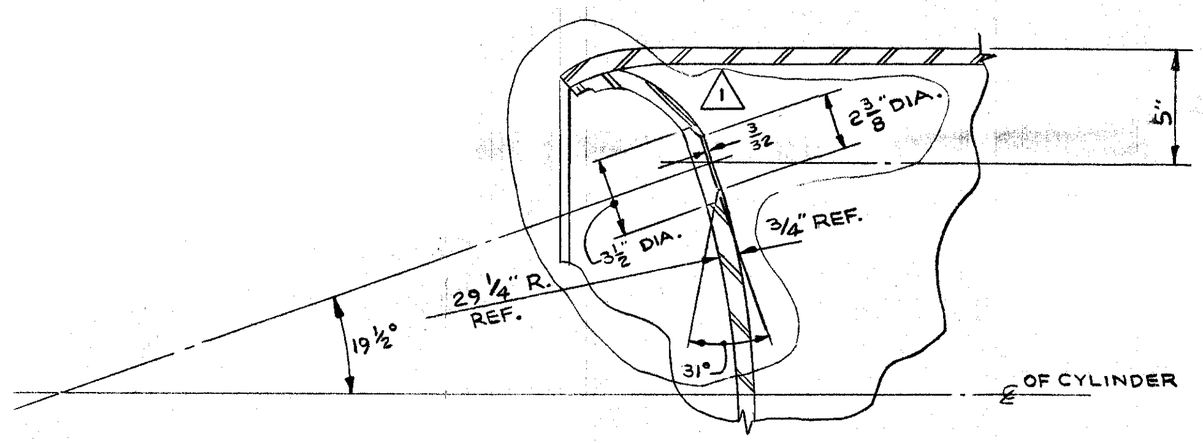

COUPLING HOLE DETAIL

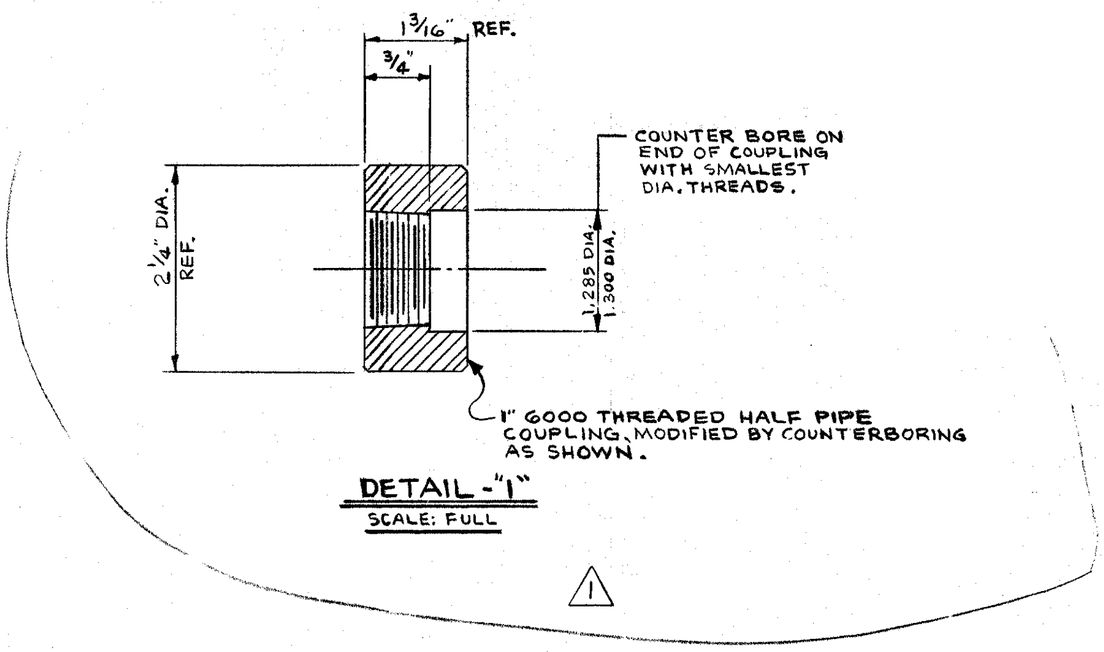

CYLINDER-UF6
MODEL-30A
HALF COUPLING INSTALLATION