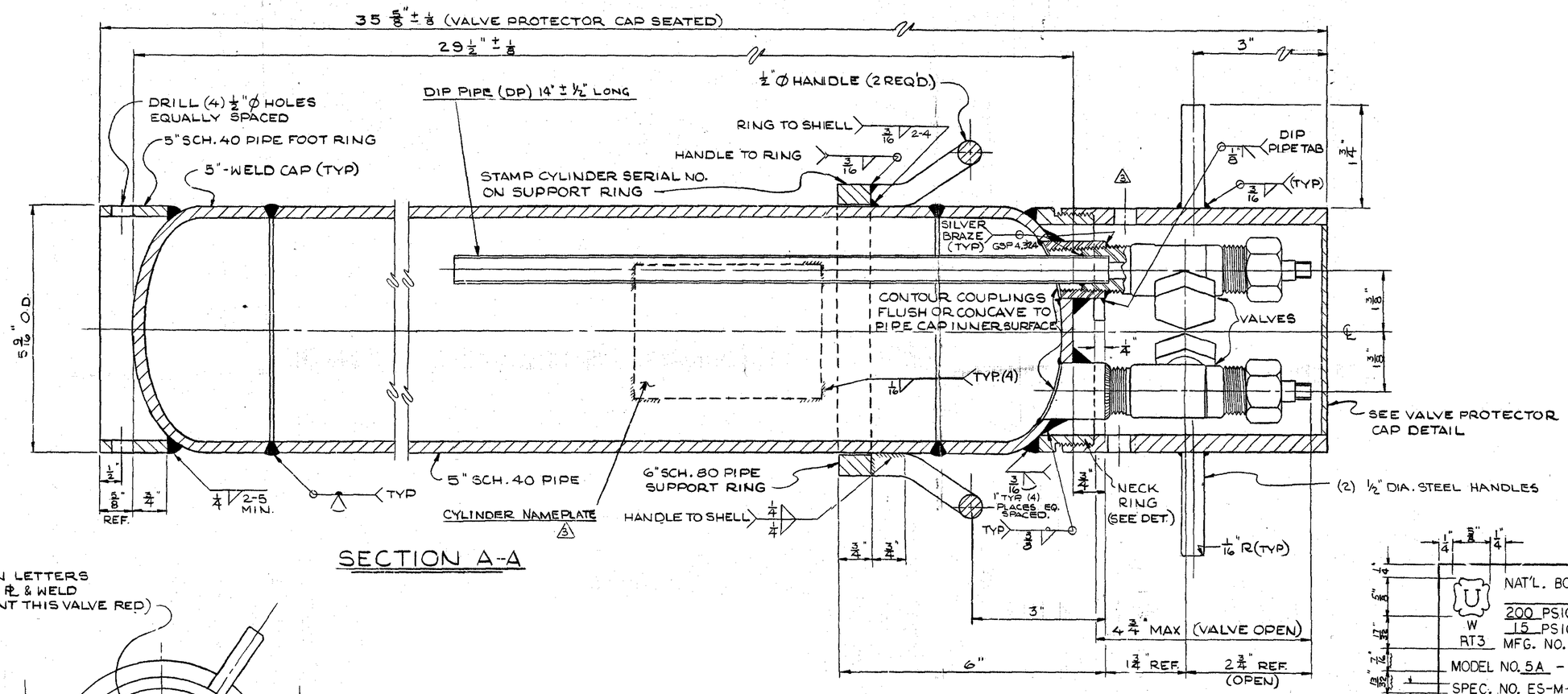

SECTION A-A

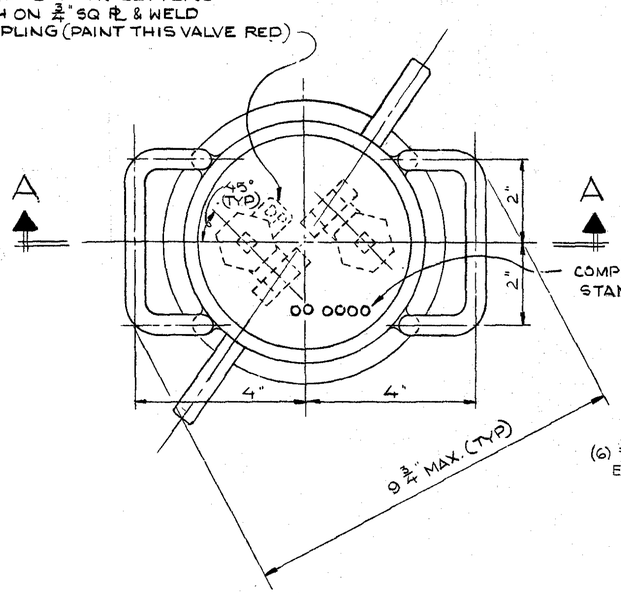

PLAN

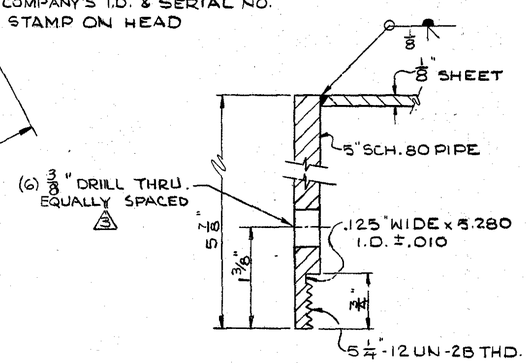

VALVE PROTECTOR CAP DETAIL

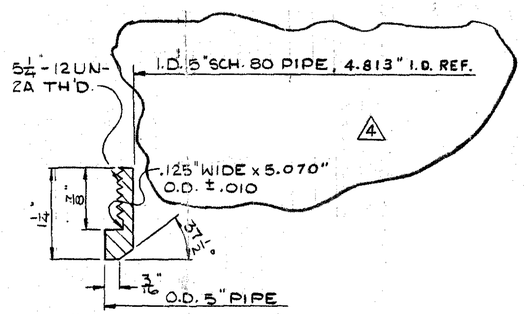

NECK RING DETAIL

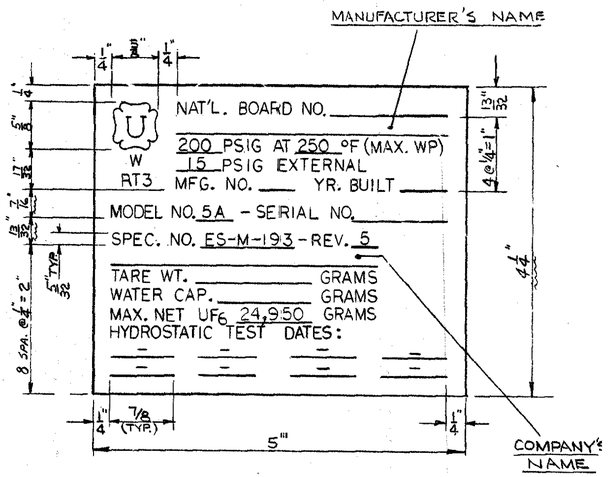

CYLINDER NAMEPLATE DATA
FULL SCALE

NOTE: DIMENSIONAL TOLERANCE ±1/16 UNLESS OTHERWISE SPECIFIED
ANGULAR TOLERANCE ±2°

UF6 CYLINDER
MODEL 5A