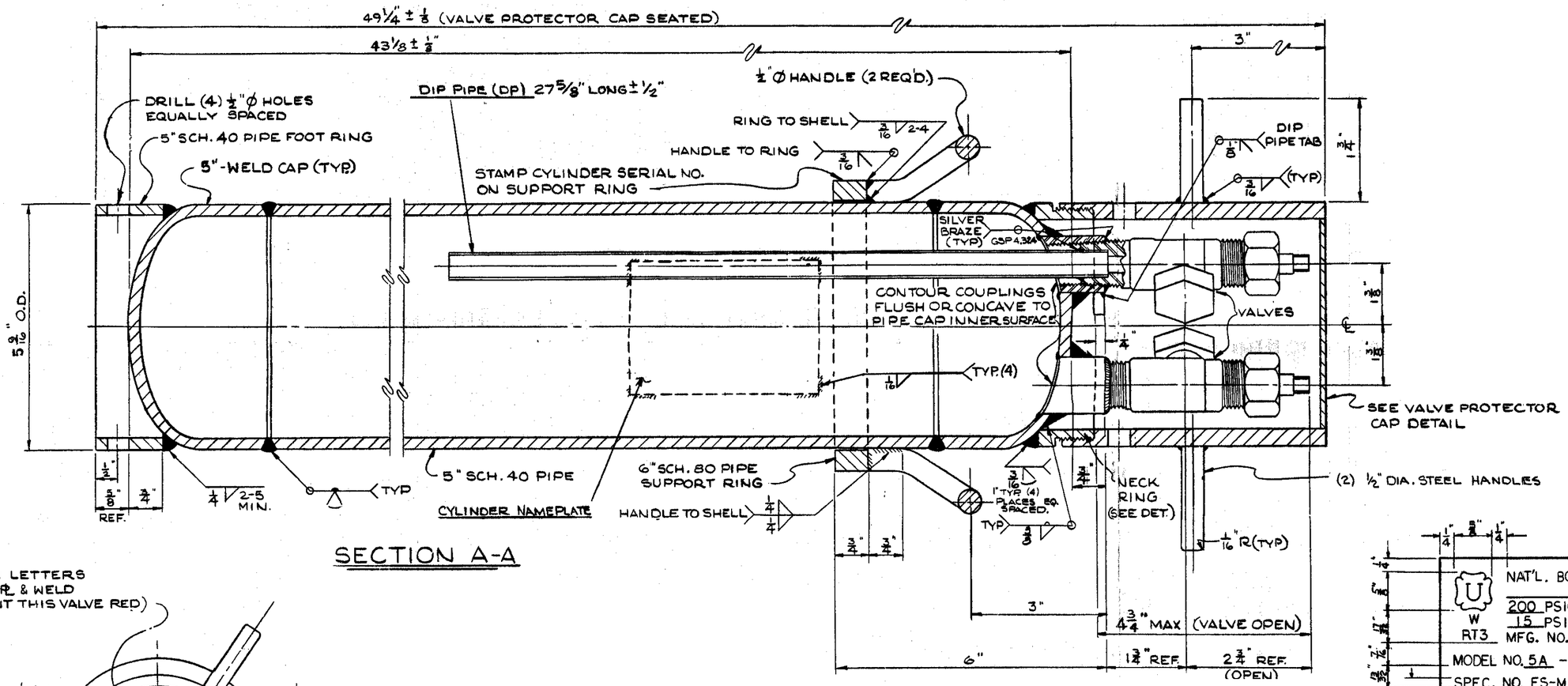

SECTION A-A

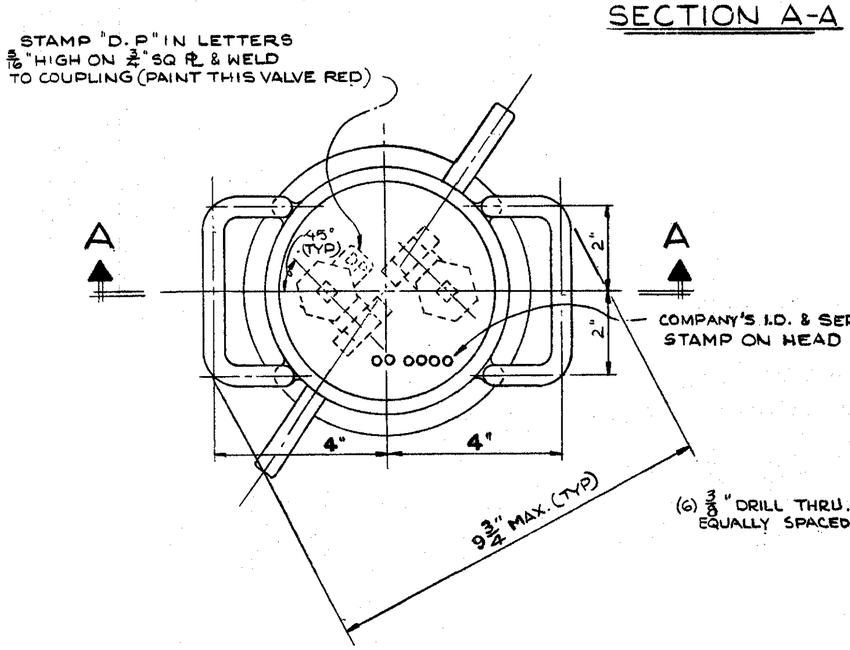

PLAN

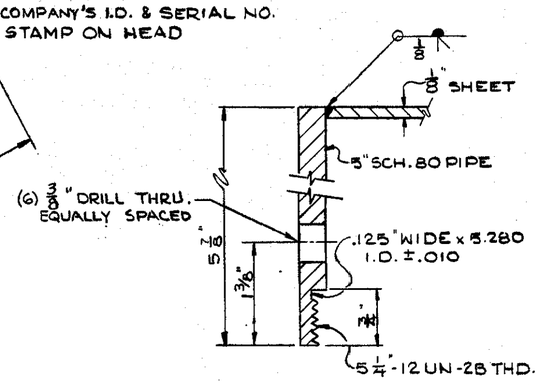

VALVE PROTECTOR CAP DETAIL

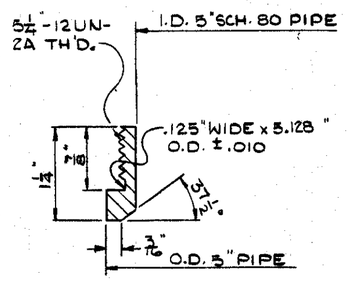

NECK RING DETAIL

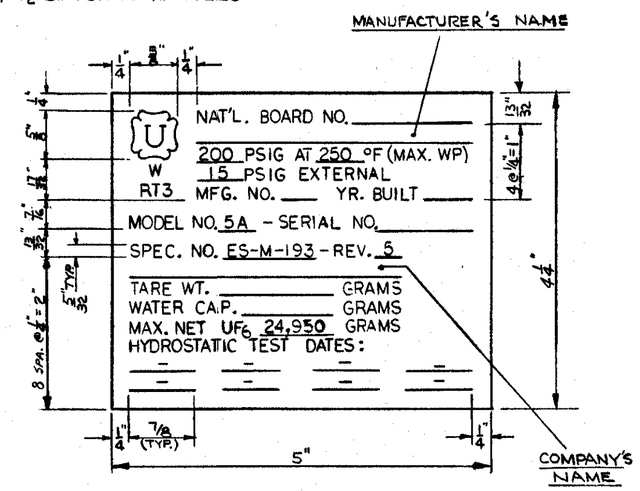

CYLINDER NAMEPLATE DATA

NOTE: DIMENSIONAL TOLERANCE ± 1/16 UNLESS OTHERWISE SPECIFIED
ANGULAR TOLERANCE ± 2°

UF6 CYLINDER
MODEL 5A-MODIFIED