4.0 HAZARD SPECIFIC DISCUSSION

The entire Oak Ridge Reservation was listed by EPA as a single entity on the National Priorities List (NPL) in 1989. In order to facilitate remedial action decision-making, DOE has divided the contaminated areas of the ORR into the following six areas, which are roughly equivalent to the major hydrologic watersheds:

- East Tennessee Technology Park
- Melton Valley at the Oak Ridge National Laboratory
- Bethel Valley at the Oak Ridge National Laboratory
- Upper East Fork Poplar Creek at the Y-12 National Security Complex
- Bear Creek Valley at the Y-12 National Security Complex
- Chestnut Ridge at the Y-12 National Security Complex

Figures 4.0a and 4.0b depict these six hazard areas under current and end state conditions, respectively. Each of these watersheds is discussed in the following sections as a distinct hazard area. Records of Decision have been issued under CERCLA for Melton Valley, Bethel Valley, Bear Creek Valley, part of Upper East Fork Poplar Creek, and part of the East Tennessee Technology Park; and decisions are under development for the remainder of the East Tennessee Technology Park and Upper East Fork Poplar Creek. Additional CERCLA decisions are planned for Chestnut Ridge and for additional actions in Bear Creek Valley. Subsequent CERCLA decisions will determine any additional requirements for groundwater protection and long-term land use controls in each of the watersheds. These hazard areas are discussed in the following sections.

These administrative watersheds are similar but not identical to the true hydraulic watershed boundaries. Conceptually under the watershed-scale decisions, all contaminant sources and associated contaminated media within a watershed are addressed by one decision with a coordinated set of actions. The objective is to address the cumulative impact of multiple sites on environmental conditions within the watershed and to optimize available resources toward meeting final CERCLA watershed-scale goals.

All of the watersheds within the ORR eventually drain to the Clinch River, and surface water represents the primary pathway for potential offsite migration of contaminants. In most cases, a single surface water body serves as the primary pathway, or integration point, for contaminant transport. White Oak Creek is the primary exit pathway for mobile contaminants in Melton Valley and Bethel Valley, Bear Creek is the primary exit pathway for the Bear Creek Valley watershed, and Upper East Fork Poplar Creek is the primary pathway for the Upper East Fork Poplar Creek watershed. ETTP and Chestnut Ridge do not have such obvious integration points.

While the detailed characteristics and specific contaminants of concern differ among these watersheds, all contain contaminated soils, sediments, surface water, and groundwater, as well as radioactive and chemically hazardous buried waste sites. Contaminants of concern include radionuclides (particularly fission products at Melton and Bethel Valleys and uranium isotopes at the other watersheds), organic chemicals and inorganic chemicals. Volatile organic compounds

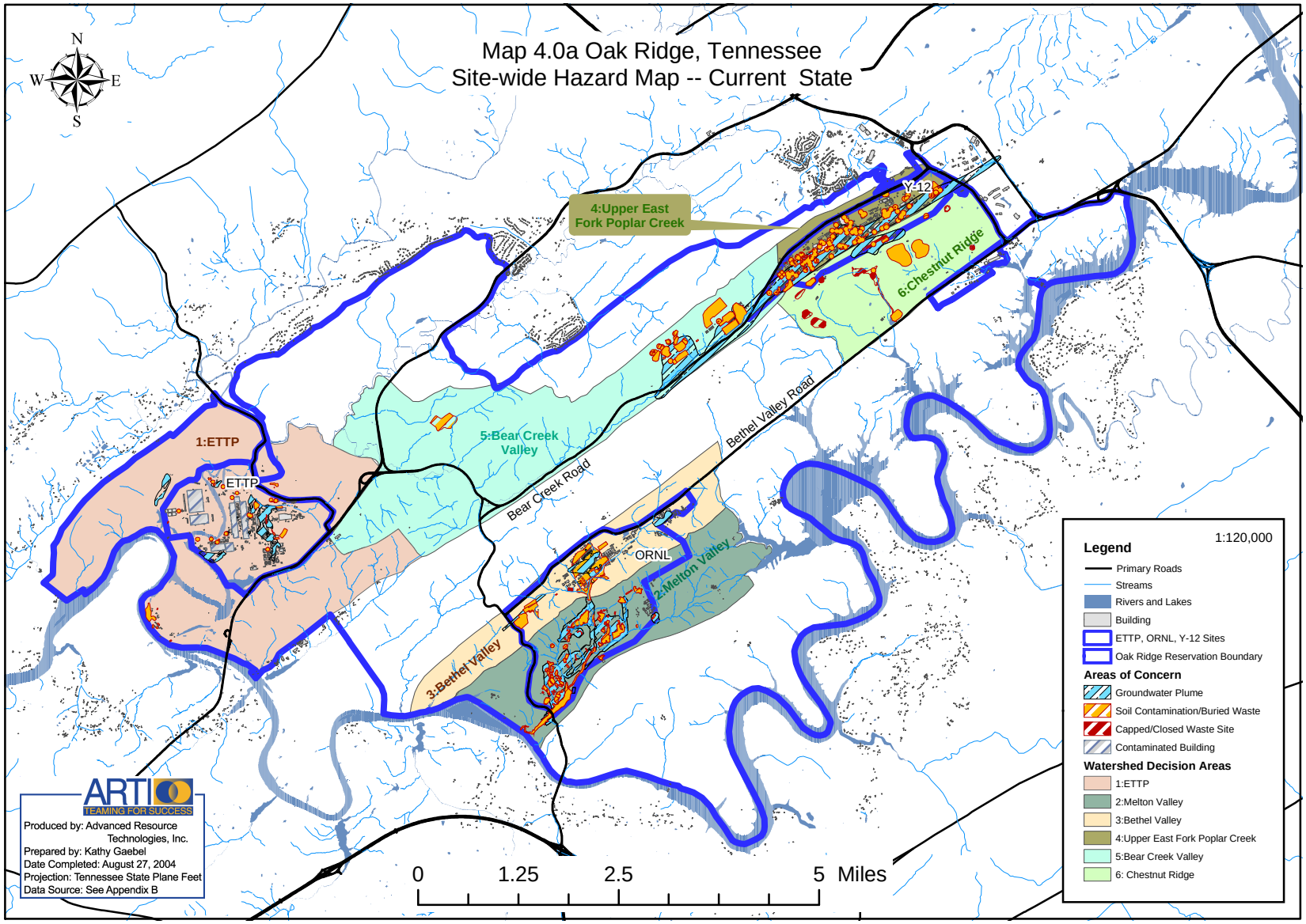
Map 4.0a Oak Ridge, Tennessee
Site-wide Hazard Map -- Current State
N
W
E
S
4:Upper East Fork Poplar Creek
Y-12
6:Chestnut Ridge
1:ETTP
ETTP
5:Bear Creek Valley
Bear Creek Road
Bethel Valley Road
ORNL
2:Melton Valley
3:Bethel Valley
0
1.25
2.5
5 Miles
1:120,000
Legend
Primary Roads
Streams
Rivers and Lakes
Building
ETTP, ORNL, Y-12 Sites
Oak Ridge Reservation Boundary
Areas of Concern
Groundwater Plume
Soil Contamination/Buried Waste
Capped/Closed Waste Site
Contaminated Building
Watershed Decision Areas
1:ETTP
2:Melton Valley
3:Bethel Valley
4:Upper East Fork Poplar Creek
5:Bear Creek Valley
6: Chestnut Ridge
ARTI
TEAMING FOR SUCCESS
Produced by: Advanced Resource Technologies, Inc.
Prepared by: Kathy Gaebel
Date Completed: August 27, 2004
Projection: Tennessee State Plane Feet
Data Source: See Appendix B

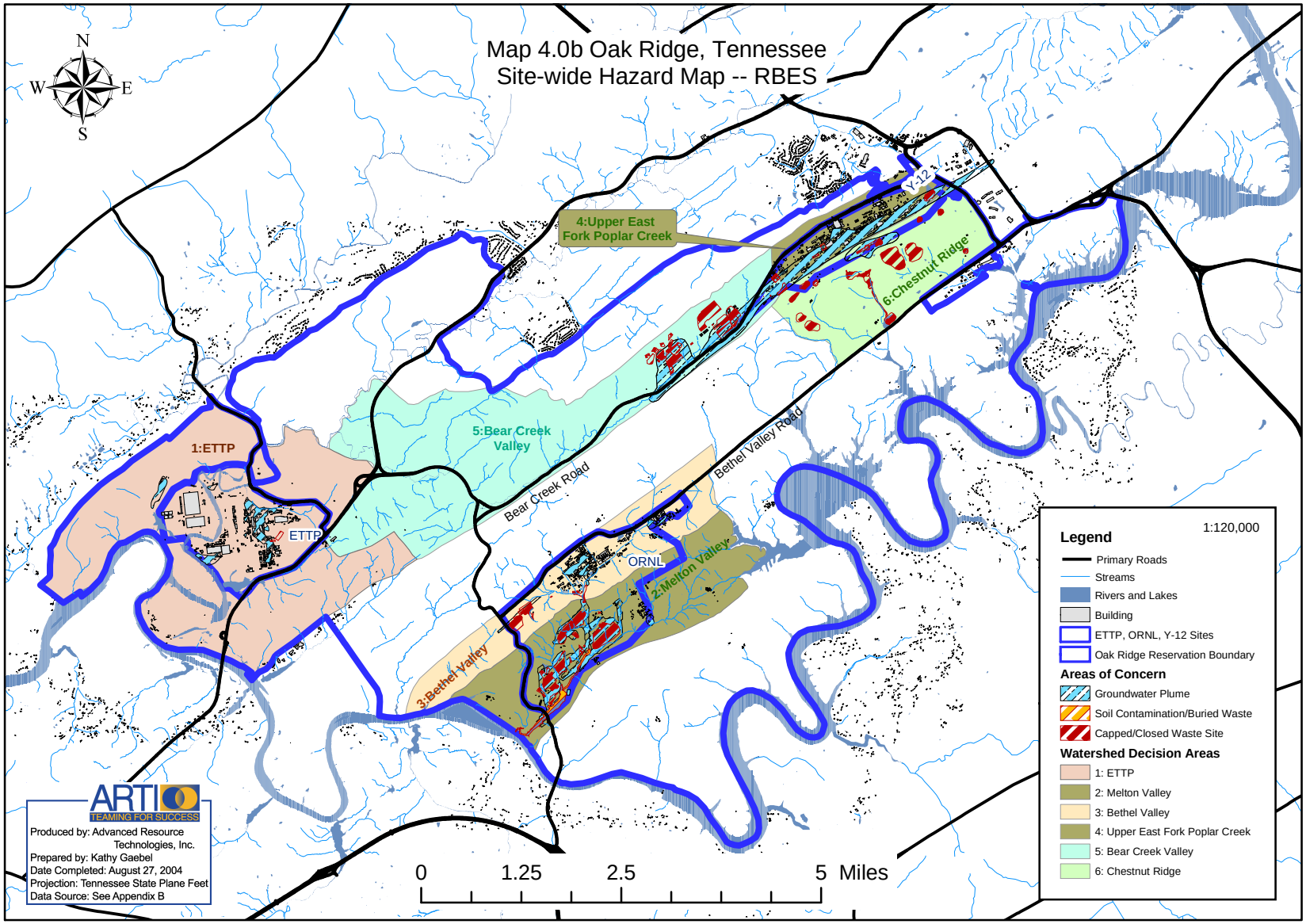
Map 4.0b Oak Ridge, Tennessee
Site-wide Hazard Map -- RBES
N
S
E
W
4:Upper East Fork Poplar Creek
Y-12
6:Chestnut Ridge
5:Bear Creek Valley
1:ETTP
ETTP
Bear Creek Road
Bethel Valley Road
ORNL
2:Melton Valley
3:Bethel Valley
0
1.25
2.5
5 Miles
1:120,000
Legend
Primary Roads
Streams
Rivers and Lakes
Building
ETTP, ORNL, Y-12 Sites
Oak Ridge Reservation Boundary
Areas of Concern
Groundwater Plume
Soil Contamination/Buried Waste
Capped/Closed Waste Site
Watershed Decision Areas
1: ETTP
2: Melton Valley
3: Bethel Valley
4: Upper East Fork Poplar Creek
5: Bear Creek Valley
6: Chestnut Ridge
ARTI
TEAMING FOR SUCCESS
Produced by: Advanced Resource Technologies, Inc.
Prepared by: Kathy Gaebel
Date Completed: August 27, 2004
Projection: Tennessee State Plane Feet
Data Source: See Appendix B

(VOCs) have been above maximum contaminant levels (MCLs) in all six watersheds; however, only one plume (the East End VOC Plume at Upper East Fork Poplar Creek) extends beyond the ORR boundary. In many cases VOC plumes discharge to surface water upstream of the ORR boundary and volatilize before moving offsite in surface water.

As described previously, DOE is currently developing comprehensive ORR-wide strategies for determining goals and evaluating remedial action alternatives for protection of groundwater (DOE 2004a) and for protection of ecological resources (DOE 2004c). While remedial actions under existing decisions are expected to have beneficial impacts on groundwater contamination and ecological resources, primarily through removal or control of contaminant sources, final decisions for protection of these resources have been deferred to the future.

4.1 Hazard Area 1 - East Tennessee Technology Park

The East Tennessee Technology Park is located near the northwest corner of the ORR, in Roane County, Tennessee. ETTP covers an area of approximately 5000 acres; however, only approximately 2200 acres are considered to be potentially impacted by site operations. For purposes of remedial action planning, this potentially impacted area has been subdivided into two areas: Zone 1 consists of approximately 1400 acres located immediately outside the boundaries of the main industrial complex; and Zone 2 consists of the main industrial complex, with an area of about 800 acres. The remaining 2800 acres, located outside of Zone 1 and 2, is referred to as the "footprint reduction area". This area is thought to be unimpacted by site operations, and no remedial actions are currently planned for this area.

Since construction, many operations have been conducted at the ETTP. Enrichment by the S-50 thermal diffusion process took place from 1944-1945. This process proved ineffective and was discontinued. From 1945-1964, the site was a gaseous diffusion enrichment facility for weapons-grade uranium. From 1965-1985, the site produced commercial grade uranium using uranium hexafluoride as feed. A centrifuge enrichment process was operated from the 1960s until 1985. The ETTP also contains many support buildings, including laboratories, maintenance shops, garages, holding ponds/cooling towers, warehouses, disposal areas, power and utilities, waste treatment plants, and decontamination facilities. The site is partially bordered by the Clinch River and its tributary Poplar Creek. Groundwater flows into Mitchell Branch, Poplar Creek, and the Clinch River.

Remedial actions at ETTP are being conducted under three CERCLA decision documents. A ROD was issued in November 2002 for remediation of contaminated soil within Zone 1 (i.e., areas outside the main plant)(DOE 2002c). A second ROD is currently under development for remediation of contaminated soil and structures within Zone 2 (i.e., the main plant area). And a third ROD is also currently under development to address site-wide groundwater contamination and ecological impacts for all media (soils, sediment, and surface water).

Remediation criteria for soils in Zone 1 and Zone 2 were derived to limit potential risk to a future site worker not to exceed 1×10^{-5} excess lifetime cancer risk (ELCR) for individual carcinogens (with adjustments based on cost considerations where justified) and a cumulative risk of 1×10^{-4}

ELCR from all carcinogenic contaminants of concern (excluding radium and thorium, for which a non-risk-based alternative concentration limit was selected). Risk from noncarcinogenic contaminants of concern (COCs) was limited not to exceed a Hazard Quotient (HQ) of 1 for individual COCs and a Hazard Index (HI) of 3 from all COCs combined for Zone 1 and HI of 1 for Zone 2. These values are summarized in Table 4-1.

Table 4-1. Soil average remediation levels to protect future industrial user at ETTP Zones 1 and 2

Target contaminants[a]	Average individual remediation concentration[b]	Basis for average individual remediation concentration	Risk[c] corresponding to the individual average remediation concentration	Residual average cumulative remediation goal[d]
Carcinogens				
Cesium-137+D	2 pCi/g	Site-specific background & Cost prohibitiveness consideration	2×10^{-5}	10^{-4} ELCR
Neptunium-237+D	5 pCi/g	Risk limit	1×10^{-5}	
Uranium-234	700 pCi/g	Risk limit	1×10^{-5}	
Uranium-235+D	8 pCi/g	Risk limit	1×10^{-5}	
Uranium-238+D	50 pCi/g	Cost prohibitiveness consideration	1.6×10^{-5}	
PCBs	10 mg/kg	Risk limit	1×10^{-5}	
Radium-226+D	5 pCi/g	Alternative Conc. Limit	2×10^{-4}	NA
Thorium-232+D	5 pCi/g	Alternative Conc. Limit	3×10^{-4}	
Thorium-230 **	5 pCi/g	Alternative Conc. Limit	8×10^{-5} [e]	
Noncarcinogens				
Arsenic (As)	300 mg/kg	EPA Region 4 policy [f]	NA[f]	10^{-4}[f] ELCR
Beryllium (Be) *	2000 mg/kg	Risk limit	HQ = 1	HI ≤3
Mercury (Hg)	600 mg/kg	Risk limit	HQ = 1	(≤ for Zone 2)

* COC for Zone 1 only.
** COC for Zone 2 only.

[a]Additional contaminants of concern (COCs) were identified in the baseline human health risk assessment for Zones 1 and 2, but not selected as target COCs due to low frequency of detection, low observed concentrations/risks, and/or commingling with other target COCs. Noncarcinogenic COCs arsenic, beryllium, and mercury were not identified as risk-based COCs for soil but were retained at the request of EPA Region 4 as commonly occurring contaminants at the ORR.

[b]The individual remediation concentration is the average remediation level for each target contaminant over an exposure unit (EU). These concentrations include background with the exceptions of radium-226+D, thorium-232+D, and thorium-230. The alternate concentration limit of 5 pCi/g above background for these isotopes is averaged over the EU and to the depth of remediation. Otherwise, the concentration limit is applied as in U. S. Department of Energy (DOE) Order 5400.5.

[c]Estimates of risk shown are those to a future industrial receptor as presented in the Zone 1 ROD; in some cases estimates computed for the Zone 2 ROD have changed due to changes in slope factors, reference doses, etc. Individual remediation concentrations are developed to be protective and are consistent across Zone 1 and Zone 2.

[d]The radium-226, thorium-232, and thorium-230 decay series are not included in the aggregate risk calculation for the EU. Rather, the remediation goal for these contaminants is similar to alternate concentration limits specified in 40 *Code of Federal Regulations* 192 and/or DOE Order 5400.5, and is set as low as reasonably achievable. Note that the cumulative risk for noncarcinogens is set at HI ≤3 for Zone 1 and HI ≤1 for Zone 2.

[e]Risk for thorium-230 accounts for 1000 years of ingrowth of radium-226+D to be consistent with DOE Order 5400.5.

[f]EPA Region 4 Policy Statement: "Arsenic is a naturally occurring mineral that is considered by EPA to be a systemic toxicant and a human carcinogen. However, there is considerable uncertainty concerning its ability to cause cancer at low exposure levels, especially the less soluble form that occurs in contaminated soil. The Superfund program of Region 4 regulates arsenic in soil as a systemic toxicant in deriving protective cleanup levels. As an additional precaution, EPA also requires soil cleanup levels to fall within the protective cancer risk range of 10^{-4} to 10^{-6} for the most sensitive likely receptor even though the calculated risk may be significantly over-protective."

ARAR = applicable or relevant and appropriate requirement.
D = radioactive decay daughter.
ELCR = excess lifetime cancer risk.
EPA = U. S. Environmental Protection Agency.
ETTP = East Tennessee Technology Park.
HI = hazard index.
HQ = hazard quotient.
NA = not applicable.
PCB = polychlorinated biphenyl.

Table 4-2. Maximum carcinogenic risk and hazard index values in soils by Zone 1 areas of ETTP

Area	Max. Carcinogenic Risk (ELCR)	Max. HI	Primary Soil COCs
K-710 Sludge Beds and Imhoff Tanks (EU-18)	6.3×10^{-3}	-	Cs-137
Powerhouse Area Soils (EU-26)	3.6×10^{-4}	-	U-238, U-235, Cs-137, Th-232
K-770 Scrap Metal & Debris (EU-29, EU-30, EU-31, EU-32, EU-33)	5.8×10^{-3}	-	U-238,U-235,U-234, Cs-137, Th-232,Np-237
K-895 Cylinder Destruct Facility Soils (EU-49)	1.6×10^{-3}	-	U-238, U-235, U-234
Blair Quarry (EU-77)	4.0×10^{-5}	2.2	PCB-1254, U-238, U-235

ETTP = East Tennessee Technology Park.

ELCR = Excess lifetime cancer risk
HI = hazard index.

Table 4-3. Maximum carcinogenic risk and hazard index values in soils by Zone 2 areas of ETTP

Area	Max. Carcinogenic Risk (ELCR)	Max. HI	Primary Soil COCs
Mitchell Branch Area	2.5×10^{-4}	1.5	PCB, U-238, U-235, U-234, Cs-137, Np-237, Th-230
K-1401/K-1070-C/D Area	2.5×10^{-4}	4.0×10^{-1}	Metals, U-238, U-235, U-234
Administrative/ Laboratories Area	5.4×10^{-4}	2.1×10^{-1}	U-238, U-235, U-234, Cs-137, Np-237
K-1064/K-25 North Trash Slope Area	3.7×10^{-4}	1.1	U-238, U-235, U-234, Cs-137, Np-237, Metals, PCB
K-25 Area	3.2×10^{-4}	5.4×10^{-1}	U-238, U-235, U-234, Cs-137, Np-237, Metals
K-27/K-29 Area	1.8×10^{-3}	1.7×10^{-1}	U-238, U-235, U-234, Cs-137, Np-237
K-31/K-33 Area	7.8×10^{-5}	1.3×10^{-1}	No COCs Identified

ETTP = East Tennessee Technology Park.

ELCR = Excess lifetime cancer risk
HI = hazard index.

The remedial action strategy for Zone 1 and Zone 2 at ETTP follows an exposure unit approach, which establishes two criteria for each contaminant of concern - an average remediation level (RL) across an exposure unit that will not be exceeded and a maximum remediation level not to be exceeded at any location. Contaminated soil in each exposure unit will be remediated so that the residual concentration averaged across the exposure unit will be at or below the average remediation level, and the maximum contaminant concentration found at any location will be at or below the corresponding maximum remediation level. In addition to the remediation levels for individual contaminants of concern, the cumulative risk to the future worker from all contaminants (excluding the radium and thorium decay series, which use non-risk-based criteria) may not exceed 1×10^{-4} ELCR and HI ≤ 3 (HI ≤ 1 for Zone 2). For most carcinogenic

contaminants, the maximum RL is set at 10-times the average RL value; for noncarcinogens and for radium and thorium, the maximum is set at 3-times the average RL value. Summaries of the maximum estimated cancer and noncancer risks prior to remedial action and the predominant contaminants of concern are provided in Tables 4-2 and 4-3 for Zone 1 and Zone 2, respectively.

Decision documents for remedial actions to address site-wide groundwater and surface water contamination and ecological impacts at ETTP are also under development. While these decisions have yet to be completed, they are being developed using a similar risk-based approach. Impacts identified to date appear to be relatively limited and may not warrant extensive remedial actions. The strategy for groundwater is expected to focus on passive measures such as monitored natural attenuation (MNA) and alternative concentration levels (ACLs). Evaluation of ecological risks for aquatic and terrestrial receptors for the entire ETTP site is currently underway and is expected to result in a remediation decision to address these risks by 2006.

In addition to the remedial actions being conducted under these CERCLA RODs, numerous buildings previously used in the uranium enrichment operations at ETTP and other support and administrative facilities must be decontaminated and/or demolished through a series of removal actions. The demolition of five buildings, collectively known as the Group I Buildings, was completed in 1999. Demolition of an additional 10 facilities, known collectively as the Group II Buildings Phase I project, was completed in 2003. Demolition of additional Group II buildings and approximately 500 other ETTP facilities is continuing. Decontamination and demolition of the primary uranium processing buildings is being conducted under two separate projects: decontamination of the K-29, K-31, and K-33 buildings which comprise almost 5 million ft^2 of floor space is scheduled for completion in 2005; demolition of the K-25 and K-27 buildings, with over 2 million ft^2 of floor space is scheduled for completion by 2008. In many cases, remediation of soils and other media will be dependent on these building removal actions.

ETTP Current State:

Under current state conditions, the major contaminant sources at the ETTP are:

- Hundreds of aging facilities have become contaminated with radioactive and hazardous substances, including uranium, PCBs and heavy metals, during operations.
- There are approximately 4,700 full uranium hexafluoride cylinders, 1,100 empty cylinders, and 980 cylinder heels stored in six locations. The UF_6 cylinders are stored outside and are subject to deterioration due to exposure to the elements. (Note: Transfer of these cylinders to Portsmouth, Ohio began during 2004 and is currently underway.)
- Soil contamination has occurred from past operations and disposal activities. Contaminants in soils and burial grounds include uranium and other radionuclides, organics, and heavy metals at levels that pose an unacceptable risk for future industrial land use.
- There are known contaminated groundwater plumes resulting from the soil contamination and buried wastes.
- Legacy waste is stored in several different locations in both inside and outside storage areas in thousands of containers.

- Waste has been buried on-site in several burial grounds.
- Ponds that collect drainage from the site prior to discharge have contaminated sediments.

For Zone 1, characterization data were available to warrant remediation of soil, scrap, and buried materials only in a few discrete areas, based on potential risk to a future industrial worker. These include known areas of contaminated soil in the K-895 Cylinder Destruct Facility area and Powerhouse Area, Blair Quarry, contaminated scrap material and debris in the K-770 Area, and the K-710 sludge beds and Imhoff tanks. Contaminants of concern primarily include radionuclides (primarily uranium), with PCBs contributing significantly only in one exposure unit. For other areas of Zone 1, a dynamic verification strategy (DVS) was adopted to collect additional characterization data to determine any additional remediation needs. Risk-based remedial action needs for Zone 2 soils and site-wide decisions to address groundwater contamination and ecological impacts have yet to be determined. The draft proposed plan (DOE 2004f) and ROD (DOE 2004g) for Zone 2 identify a number of areas within Zone 2 where remediation of surface and subsurface soil is needed to protect the future industrial worker and proposes an approach generally similar to that used for Zone 1.

Three primary areas of groundwater contamination have been identified at ETTP: one located in the main plant area, one on the western edge of the plant near Poplar Creek, and one outside the industrial area. Primary contaminants of concern in groundwater include trichloroethene and other VOCs, with sporadic areas of low-level radiological (primarily Technetium-99 and/or uranium) contamination. Most observed groundwater contamination occurs in the shallow unconsolidated zone above bedrock, and discharges to Poplar Creek, the Clinch River and building basements. Some evidence of DNAPL contamination exists near Mitchell Branch and in the main plant area. Available off-site data do not suggest that groundwater contamination from ETTP extends beyond the Clinch River.

Life-Cycle Baseline Plan for ETTP:

The following remedial actions are planned to be completed by 2008 in the current baseline for ETTP:

- Nearly 500 facilities covering about 15 million ft^2 will be demolished unless the title is transferred to the Community Reuse Organization of East Tennessee for reindustrialization (approximately 25 of the 500 facilities are currently targeted for possible title transfer).
- The existing inventory of approximately 6,800 UF_6 cylinders will be dispositioned. Full and partially filled cylinders will be shipped to the site(s) of the future conversion facility, while the empty cylinders will be directly disposed of at the Nevada Test Site. (Note: Shipment of cylinders to Portsmouth, Ohio began during 2004 and is currently underway.)
- Scrap metal and debris in two scrap yards will be removed for disposal.
- Soil exceeding risk-based cleanup levels for industrial use will be excavated to a maximum depth of 10 ft, and sources of groundwater contamination will be excavated for disposal at ORR or offsite disposal facilities.
- Following the removal of key contaminant sources, actions for protection of groundwater at ETTP may include alternate concentration limits or monitored natural attenuation.

- Legacy waste (~26,000 yd^3) will be disposed at both ORR (CERCLA waste) and offsite disposal facilities (non-CERCLA wastes and mixed waste).
- The K-1070-B and K-1070-C/D burial grounds will be excavated for disposal at ORR or offsite disposal facilities.
- Pond sediments exceeding risk-based remediation levels will be excavated for disposal at ORR or offsite disposal facilities.
- Institutional controls will be maintained in perpetuity to prohibit disturbance of soils at a depth greater than 10 ft below ground surface and to prohibit onsite use of groundwater.

End State Vision for ETTP:

Current baseline plans for ETTP are designed to support the planned end use of this site as a commercial industrial park with minimal continuing DOE presence. Remediation criteria have been (Zone 1 ROD) and continue to be (future Zone 2 and sitewide groundwater RODs) derived to achieve an acceptably low level of risk to the future industrial worker. In most cases, therefore, the actions planned under the life-cycle baseline are considered to be entirely consistent with remedial actions designed solely on the basis of the end state vision. Only two potential variances have been identified to date (also see Table A-1 in Appendix A):

- While a final decision will not be made until the ETTP Zone 2 ROD is completed, baseline plans have called for complete excavation of all buried wastes in the K-1070-C/D burial grounds for disposal at ORR or offsite disposal facilities. This remedy was assumed to be most consistent with the desired end use of the ETTP site as an unrestricted commercial industrial park. However, it may be possible to achieve an equally protective remedy, potentially at lower cost, for the K-1070-C/D burial grounds for an alternative that involves excavation of wastes and contaminated soil above risk-based remediation criteria for industrial use to a depth of 10 ft and leaving deeper wastes in place beneath clean backfill and soil cover. Estimates of potential benefits from this partial excavation alternative include approximately $43 million in cost savings and approximately 1.5 year schedule acceleration. Potential risks to remediation workers and transportation risks would be lower for this alternative than for complete excavation, without a commensurate increase in post-remediation risks to future industrial occupants of the site. Since the K-1070-C/D burial grounds contain classified materials, security requirements for implementation of each alternative must be included in the comparative analysis of alternatives.
- The great majority of buildings currently remaining at ETTP will be demolished during the site closure process. Only those buildings which have a specific identified future use by private industry will remain, with titles transferred to CROET. These remaining buildings may contain residual radiological contamination on building surfaces (walls, floors, structural beams, etc) that may require decontamination to levels sufficiently protective for future occupants. Current cleanup operations at ETTP are based on surface radioactivity limits specified in DOE Order 5400.5, Table IV-1, which are not risk- or dose-based. Under the proposed end state alternative, dose-based criteria will be derived specifically for the radionuclides of concern in designated buildings based on the designated future use scenarios for each building. These criteria will be derived to limit the potential radiation dose and health risk to future building occupants to levels that are determined to be protective and

consistent with DOE policy to reduce exposures as low as reasonably achievable (ALARA). Dose-based surface activity criteria would be applied primarily for those buildings where attainment of the 5400.5 criteria would be particularly difficult with respect to increased costs and risks to decontamination works that are not commensurate with reductions in residual exposure. Implementation of dose-based criteria for surface contamination for these buildings at ETTP will significantly reduce potential risks to decontamination workers, while still limiting risks to public health and the environment to acceptably low levels. To date, the use of dose-based criteria has been proposed only for surface contamination on overhead surfaces in the K-31 and K-33 former gaseous diffusion process buildings due to the specific characteristics of these buildings. However, additional buildings may be considered in the future. Potential benefits of the proposed end state alternative include $95 million in cost savings, approximately 1 year in schedule reduction, and significantly reduced risks to decontamination workers. The reduction in remediation worker risks is particularly significant due to the reduced requirements for decontamination of elevated structural steel members and building surfaces at considerable heights above the floor in these buildings, which present a major physical hazard to workers performing decontamination operations.

Maps of the ETTP site under current and end state conditions are provided in Figures 4.1a1 and 4.1b1. Conceptual site models under current state and end state conditions are illustrated in Figures 4.1a2 and 4.1b2, respectively. Remediation decisions for ETTP groundwater contamination and ecological resources are not yet complete, but these maps and CSMs reflect currently available information.

Under both the baseline and end state remediation scenarios for ETTP, contaminated buildings, soils and other materials exceeding risk-based criteria for future industrial use will be removed from the site for off-site disposal. Baseline and end state scenarios vary only with respect to the management of buried wastes in a small portion of the site and the criteria selected for decontamination of building surfaces. Thus, Figure 4.1b2 indicates primary sources to be removed above-grade, while some below-grade waste may remain onsite. In either case, a long-term stewardship program will ensure the continuing protectiveness of the remedy, including continuing surveillance and maintenance. Groundwater monitoring wells will require periodic maintenance and replacement at longer (~ 30-year) intervals. Since contaminants will remain on site above levels suitable for unlimited use and unrestricted exposure, a statutory review will be conducted at least every five years to ensure that the remedy continues to be protective of human health and the environment.

Future ownership of the ETTP site is less clearly defined than that for other areas of the ORR. ETTP has no continuing DOE mission, and DOE intends to transfer ownership of ETTP facilities to the private sector for development as a commercial industrial park. However, this vision is dependent on the availability of sufficient private sector enterprises with interest in developing this site. It is possible that portions of the site may not be successfully developed for commercial industrial use and DOE may retain ownership of such parcels for the longer term. Nevertheless, the end state vision for ETTP calls for commercial development of the entire site. Institutional controls required under the selected remedy (e.g., no disturbance of soils below 10 ft bgs, no groundwater use, industrial land use) will be incorporated in the deed for all transferred properties.

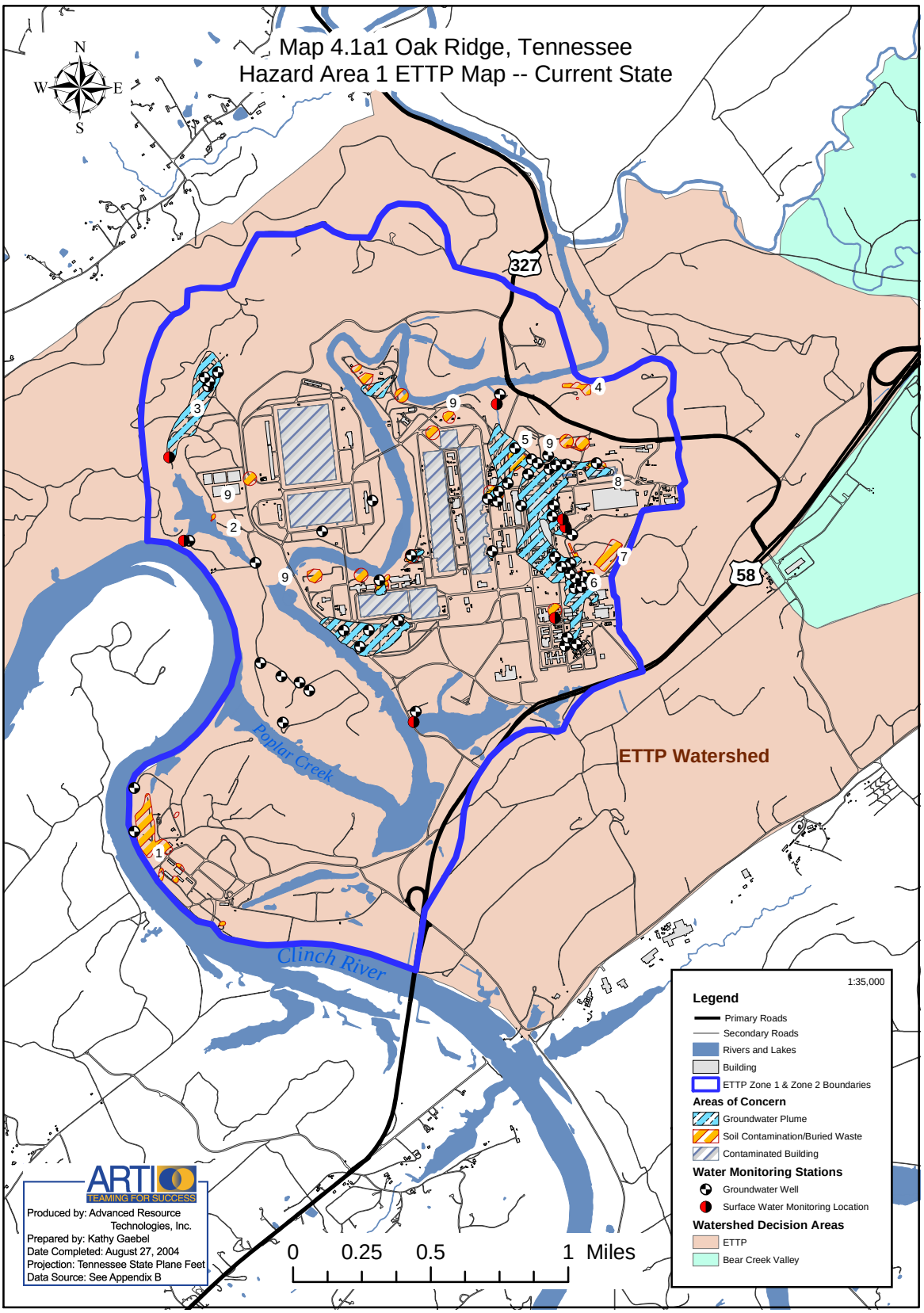
Map 4.1a1 Oak Ridge, Tennessee
Hazard Area 1 ETTP Map -- Current State
N
W
E
S
327
58
Poplar Creek
Clinch River
ETTP Watershed
1
2
3
4
5
6
7
8
9
0
0.25
0.5
1 Miles
1:35,000
Legend
Primary Roads
Secondary Roads
Rivers and Lakes
Building
ETTP Zone 1 & Zone 2 Boundaries
Areas of Concern
Groundwater Plume
Soil Contamination/Buried Waste
Contaminated Building
Water Monitoring Stations
Groundwater Well
Surface Water Monitoring Location
Watershed Decision Areas
ETTP
Bear Creek Valley
ART
TEAMING FOR SUCCESS
Produced by: Advanced Resource Technologies, Inc.
Prepared by: Kathy Gaebel
Date Completed: August 27, 2004
Projection: Tennessee State Plane Feet
Data Source: See Appendix B

Figure 4.1a1 Continued

Notes for ETTP current state map:

1. Powerhouse Area Scrap and Contaminated Soils (Zone 1) – Includes K-770 Scrap Yard, K-710 sludge beds and Imhoff tanks, and contaminated soils in the Powerhouse area, identified to contain contaminants of concern above risk-based remediation levels for industrial use.

2. Contaminated soil at the K-895 Cylinder Destruct Facility, located in the K-901 Area (Zone 1) – Characterization data indicate the presence of radionuclides of concern above risk-based remediation levels for industrial use.

3. K-1070-A Waste Burial Ground (Zone 1) - Remediation of K-1070-A burial ground completed FY2003; groundwater plume remains, which will be addressed as part of the ETTP site-wide groundwater ROD.

4. Blair Road Quarry, located in the K-901 area (Zone 1) – A 2-acre site where historical burning and burial of miscellaneous material occurred; characterization data indicate levels of contaminants of concern above risk-based remediation levels for industrial use.

5. K-1070-B Waste Burial Ground (Zone 2) – Six unlined trenches used for disposal of a wide variety of wastes from the early 1950s until 1976; this disposal area was created by filling in the topographic low at the confluence of the original streambeds of Mitchell Branch and a tributary flowing from the south.

6. K-1070-C Waste Burial Ground (Zone 2) – Two unlined trenches used for disposal of ETTP wastes during 1975-1976; used as a maintenance equipment storage yard since completion of landfill operations.

7. K-1070-D Waste Burial Ground (Zone 2) – Includes three large trenches used for disposal of low-level radioactive waste and nonradioactive wastes, 10 pits used for disposal of liquid and solid hazardous wastes, three former earthen diked storage areas used for storage of containerized solvents and waste oils, and two landfarm areas; disposal operations took place from 1976 to 1988. Under a ROD issued in 1997, waste materials in the one of the disposal pits (G-Pit) were excavated and treated for off-site disposal and the pit was backfilled with a concrete mix, flowable fill material.

8. Mitchell Branch Area (Zone 2) – Mitchell Branch flows across the northeast portion of the ETTP main industrial area into Poplar Creek; groundwater contamination in the Mitchell Branch subwatershed includes numerous radioactive and chemical contaminants of concern.

9. UF_6 Cylinder Yards – Approximately 6800 cylinders of uranium hexafluoride (4700 full cylinders, 1100 empty cylinders, and 980 heels) are currently stored in five outdoor storage yards throughout the ETTP site.

In addition to the hazards identified above, the ETTP site contains approximately 500 buildings and facilities, many of which contain radiological and/or chemical contamination associated with historical process operations, and an extensive infrastructure of deteriorating pipelines and other utilities. Many of these buildings contain residual contamination from previous operations, including radioactive materials on building surfaces, and PCBs; note that only the large uranium enrichment buildings are specifically marked as contaminated in Figure 4.1a1, but many other facilities also contain contamination to varying degrees.

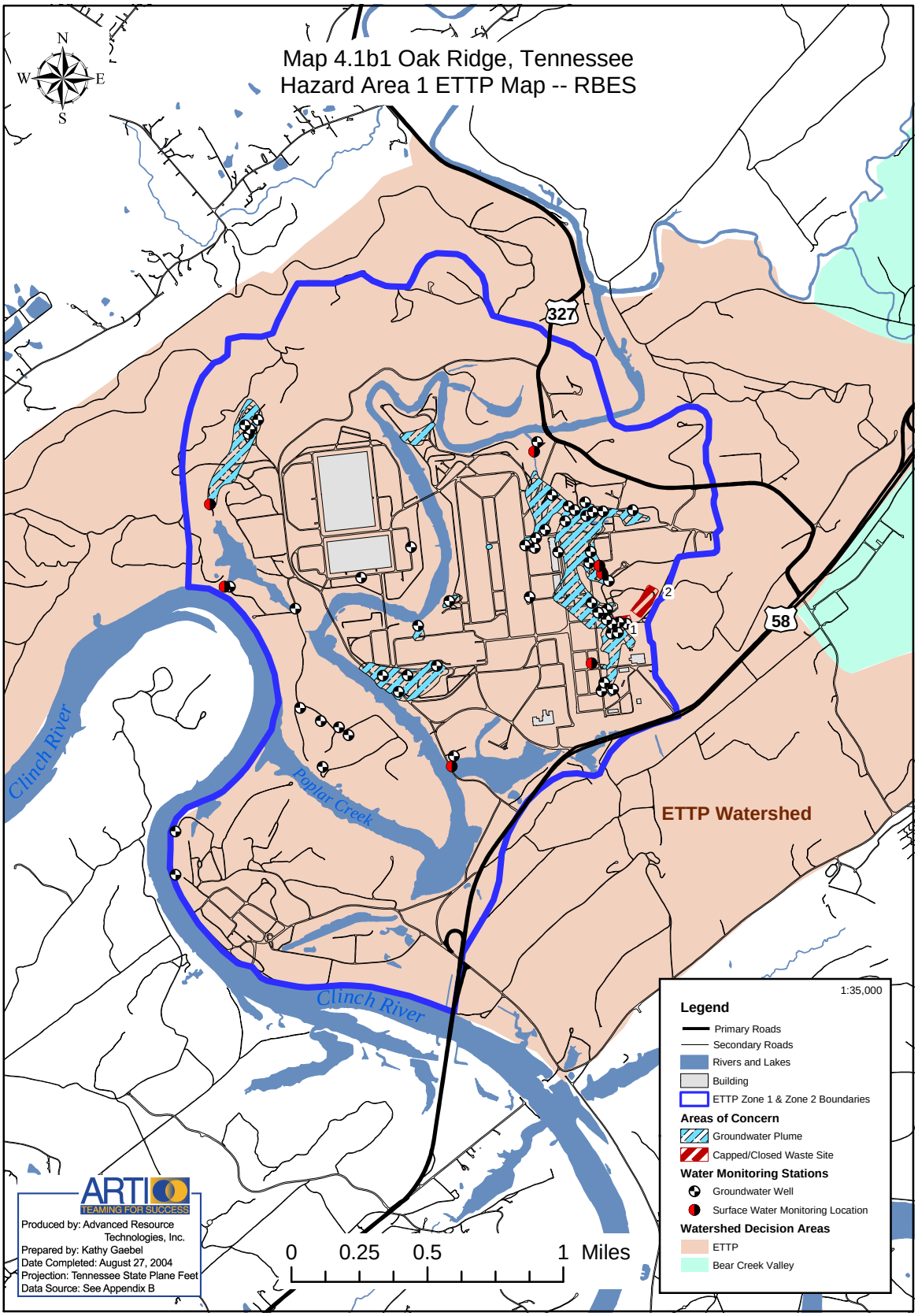
Map 4.1b1 Oak Ridge, Tennessee
Hazard Area 1 ETTP Map -- RBES
N
W
E
S
327
58
2
1
Clinch River
Poplar Creek
Clinch River
ETTP Watershed
1:35,000
Legend
Primary Roads
Secondary Roads
Rivers and Lakes
Building
ETTP Zone 1 & Zone 2 Boundaries
Areas of Concern
Groundwater Plume
Capped/Closed Waste Site
Water Monitoring Stations
Groundwater Well
Surface Water Monitoring Location
Watershed Decision Areas
ETTP
Bear Creek Valley
0 0.25 0.5 1 Miles
ARTI
TEAMING FOR SUCCESS
Produced by: Advanced Resource Technologies, Inc.
Prepared by: Kathy Gaebel
Date Completed: August 27, 2004
Projection: Tennessee State Plane Feet
Data Source: See Appendix B

Figure 4.1b1 Continued

Notes for ETTP End State map:

1. K-1070-C Waste Burial Ground – Life-cycle baseline calls for complete excavation of buried wastes in the K-1070-C burial ground. End state vision calls for excavation of all soil or waste that is a potential source of unacceptable groundwater contamination and any soil or waste in the top 10 ft depth that presents an unacceptable risk to the future industrial worker. Material that is below the risk-based remediation levels and is not a source of unacceptable groundwater contamination would remain. Institutional controls would be required to prevent unacceptable access to residual contamination and to prevent access to classified materials remaining in the burial ground; institutional controls to prevent use of onsite groundwater and to restrict future land use to industrial use throughout ETTP would be required under either scenario.

2. K-1070-D Waste Burial Ground – Life-cycle baseline calls for complete excavation of buried wastes in the K-1070-D burial ground. End state vision calls for excavation of all soil or waste that is a potential source of unacceptable groundwater contamination and any soil or waste in the top 10 ft depth that presents an unacceptable risk to the future industrial worker. Material that is below the risk-based remediation levels and is not a source of unacceptable groundwater contamination would remain. Institutional controls would be required to prevent unacceptable access to residual contamination and to prevent access to classified materials remaining in the burial ground; institutional controls to prevent use of onsite groundwater and to restrict future land use to industrial use throughout ETTP would be required under either scenario .

All other hazards shown in Figure 4.1a1 are expected to be removed to risk-based levels for protection of the industrial worker under both current baseline and end state scenarios to support the desired end use as a commercial industrial park. Potential ecological risks have not yet been fully evaluated in CERCLA decision documents to date but will be addressed in a future decision document.

Under both the current baseline and end state conditions, uncertainty remains as to which buildings will be demolished and which will remain; in either case, only those buildings which have a specific identified future use by private industry will remain, with title transferred to CROET. With respect to any buildings that may remain at ETTP, the baseline and end state scenarios differ only in the decontamination criteria to be used; under the current baseline, buildings would be decontaminated to surface activity concentration limits specified in DOE Order 5400.5, whereas the end state vision would adopt dose-based concentration limits for residual surface activity, consistent with current DOE and NRC guidance.

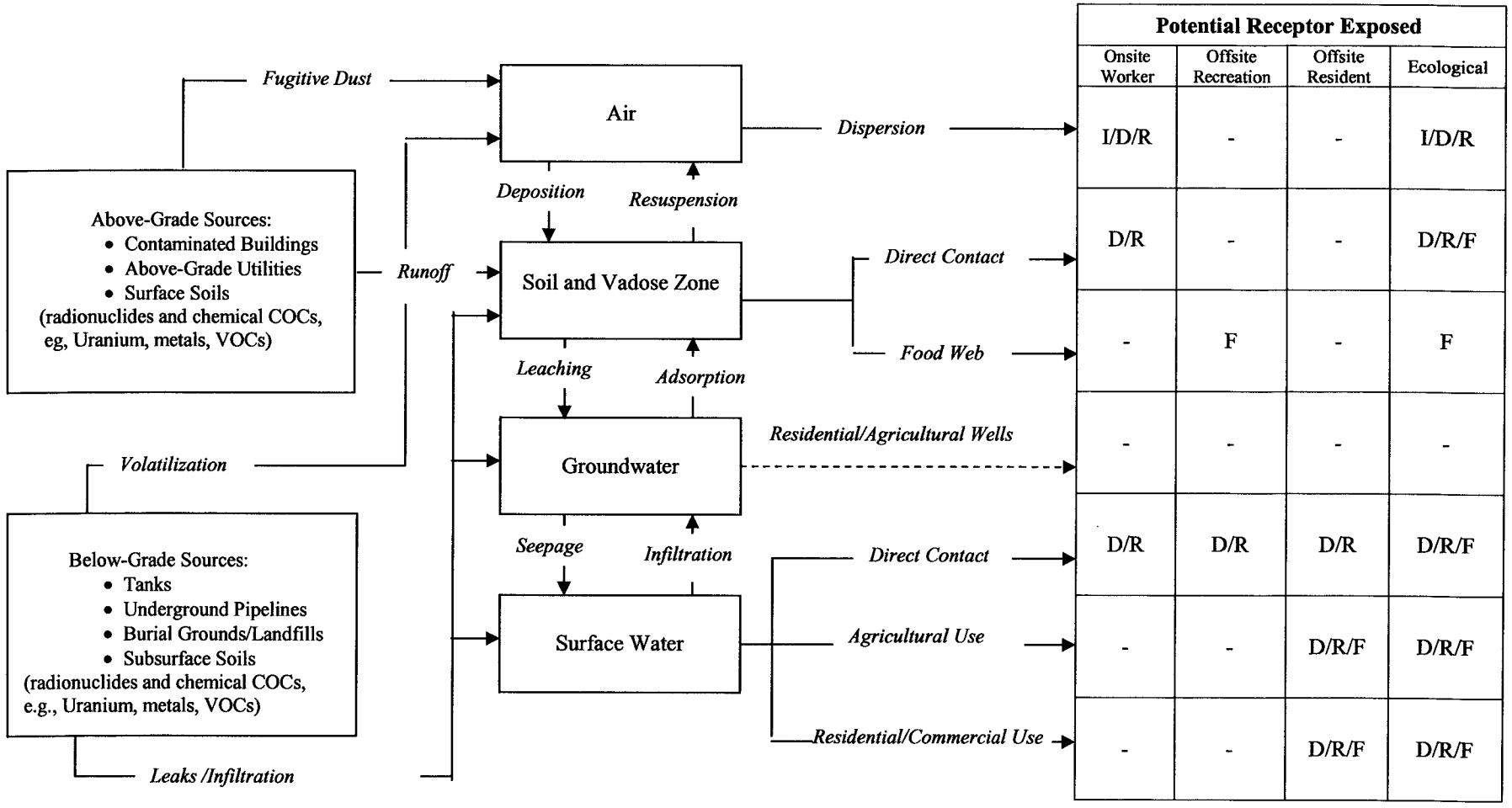

KEY

→ Active transport, uptake, or exposure pathway

- - - → Blocked or mitigated transport, uptake, or exposure pathway

I – Inhalation F – Ingestion
D – Dermal contact R – Direct Radiation Exposure

Figure 4.1a2, Conceptual Site Model - Hazard Area 1, ETTP – Current State

Narrative:

Contaminant Sources:

Under current state conditions, numerous buildings, above- and below-grade pipelines and other utilities, tanks, soils and waste burial grounds contain contaminants of concern in concentrations above site remediation levels. Contaminants of concern include radionuclides (primarily uranium), metals, VOCs, and PCBs.

Current State Exposure Pathways and Receptors:

Under current conditions, potentially complete exposure pathways for onsite workers include: inhalation of particulates or volatiles; and direct exposure to radiation in soils, buildings/structures, waste and surface water. Potentially complete exposure pathways to off-site recreationists include direct contract with surface water and ingestion of fish. Ecological receptors potentially may be exposed to contaminants in air, soil, surface water and the food chain. Potentially complete exposure pathways to offsite residents include direct contact with surface water after exiting the ORR, fish ingestion, and use of contaminated surface water for irrigation of home gardens. There is no current use of groundwater or surface water at ETTP for residential, commercial, or agricultural purposes.

Figure 4.1a2, Conceptual Site Model - Hazard Area 1, ETTP – Current State

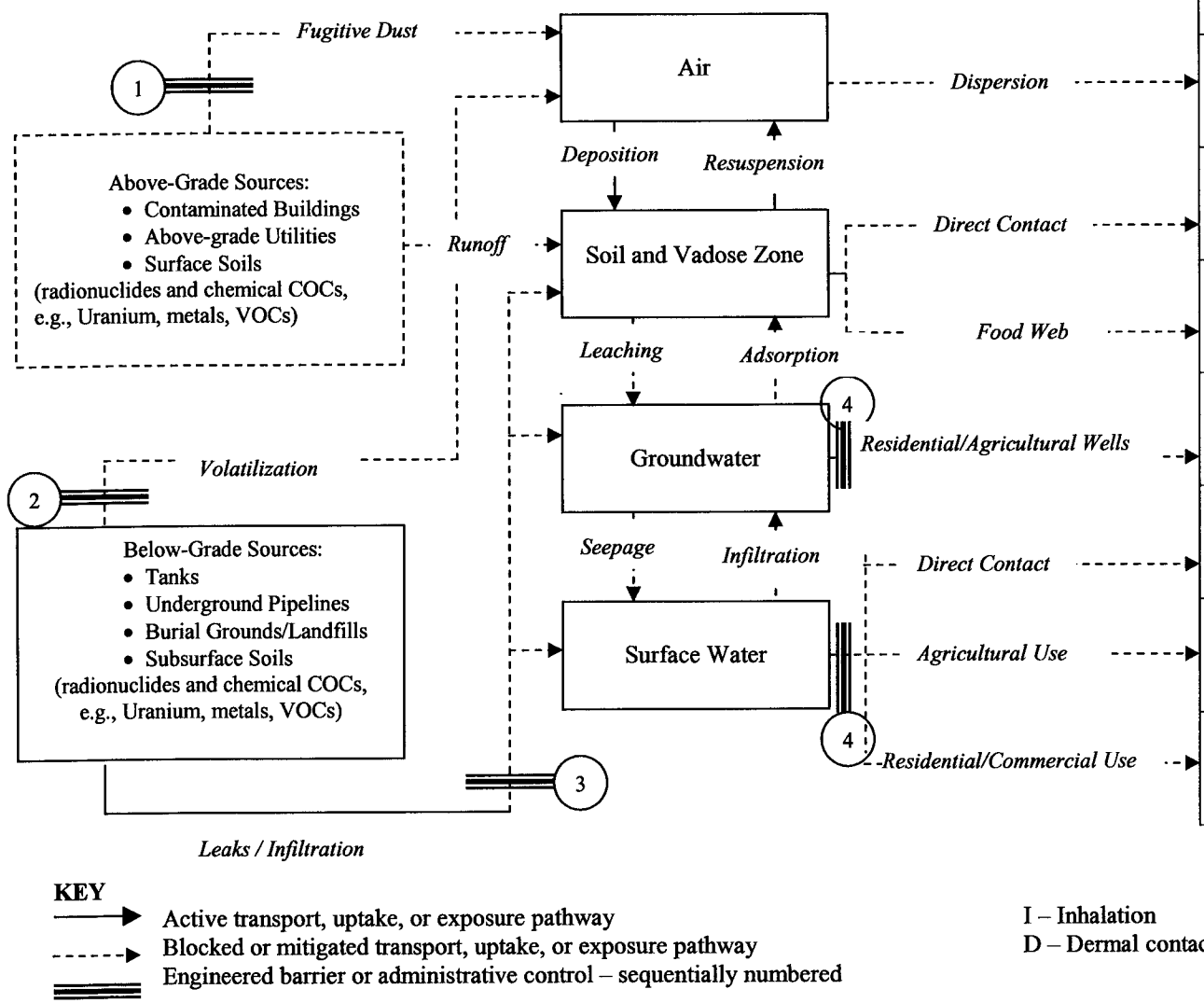

Potential Receptor Exposed			
Onsite Worker	Offsite Recreation	Offsite Resident	Ecological
I/D/R	-	-	I/D/R
D/R	-	-	D/R/F
-	F	-	F
-	-	-	-
D/R	D/R	D/R	D/R/F
-	-	D/R/F	D/R/F
-	-	D/R/F	D/R/F

Figure 4.1b2, Conceptual Site Model – Hazard Area 1, ETTP – End State

Narrative:

Contaminant Sources:

Under both current life-cycle baseline and end state conditions, ETTP will be released from DOE control for reuse as a commercial idustrial park. All buildings, pipelines and other utilities, soils, and other sources containing contaminants above remediation critieria for industrial use will be removed for offsite disposal. Residual contamination below the risk-based remediation criteria will remain in soils, sediments, surface water and groundwater, that will preclude unrestricted use of the site but will not pose unacceptable risk to future receptors under the selected industrial land use. Institional controls will include restrictions on future groundwater use.

End State Barriers/Interventions:

The steps taken to mitigate or remove these hazards are as follows:

1. Contaminated buildings, utilities and soils to a depth of 10 ft above risk-based remediation criteria will be removed for offsite disposal. Only those buildings selected for commercial industrial use will remain onsite, with title transferred from DOE to CROET. Residual contaminant levels will be below levels of concern for fugitive dust emissions.

2. Contamination above risk-based remediation levels in tanks, below-grade pipelines and utilities, and soils to a depth of 10 ft below ground surface will be removed for offsite disposal, eliminating potential for airborne emissions. Buried wastes that pose a potential threat to groundwater or present an unacceptable risk to future workers will be excavated for offsite disposal, while some buried wastes that do not present an unacceptable risk to workers or groundwater (e.g., K-1070-D) may be left in place, with long-term institutional controls. Residual contamination levels also will be below levels of concern for direct radiation exposure.

3. Remediation of contamination above risk-based remediation levels in tanks, below-grade pipelines and utilities, buried waste, and soil to a depth of 10 ft also will eliminate potential for continuing releases to surface water or groundwater. Residual contamination levels also will be below levels of concern for direct radiation exposure.

4. Future land use is restricted to industrial use, with prohibitions on groundwater and surface water use. Long-term stewardship and institutional controls will ensure continuing protectiveness of the remedy. Surveillance and maintenance will include monitoring of surface water and groundwater, periodic maintenance and replacement of groundwater wells (assumed every ~30 years), and ongoing access controls and maintenance of remaining buried wastes as required.

Since contaminants will remain on site above levels suitable for unlimited use and unrestricted exposure, a statutory review will be conducted at least every five years to ensure that the remedy continues to be protective of human health and the environment. The end state condition is expected to be highly sustainable. Since the primary remedial action is the removal of contaminated media above risk-based criteria for offsite disposal, potential failure modes will be limited to violation of the institutional controls to prevent access to residual contamination at depths below 10 ft or unauthorized land use.

Figure 4.1b2, Conceptual Site Model – Hazard Area 1, ETTP – End State